SIMTEK

Tools for
highest
expectations

Wide-spread
grooving system.

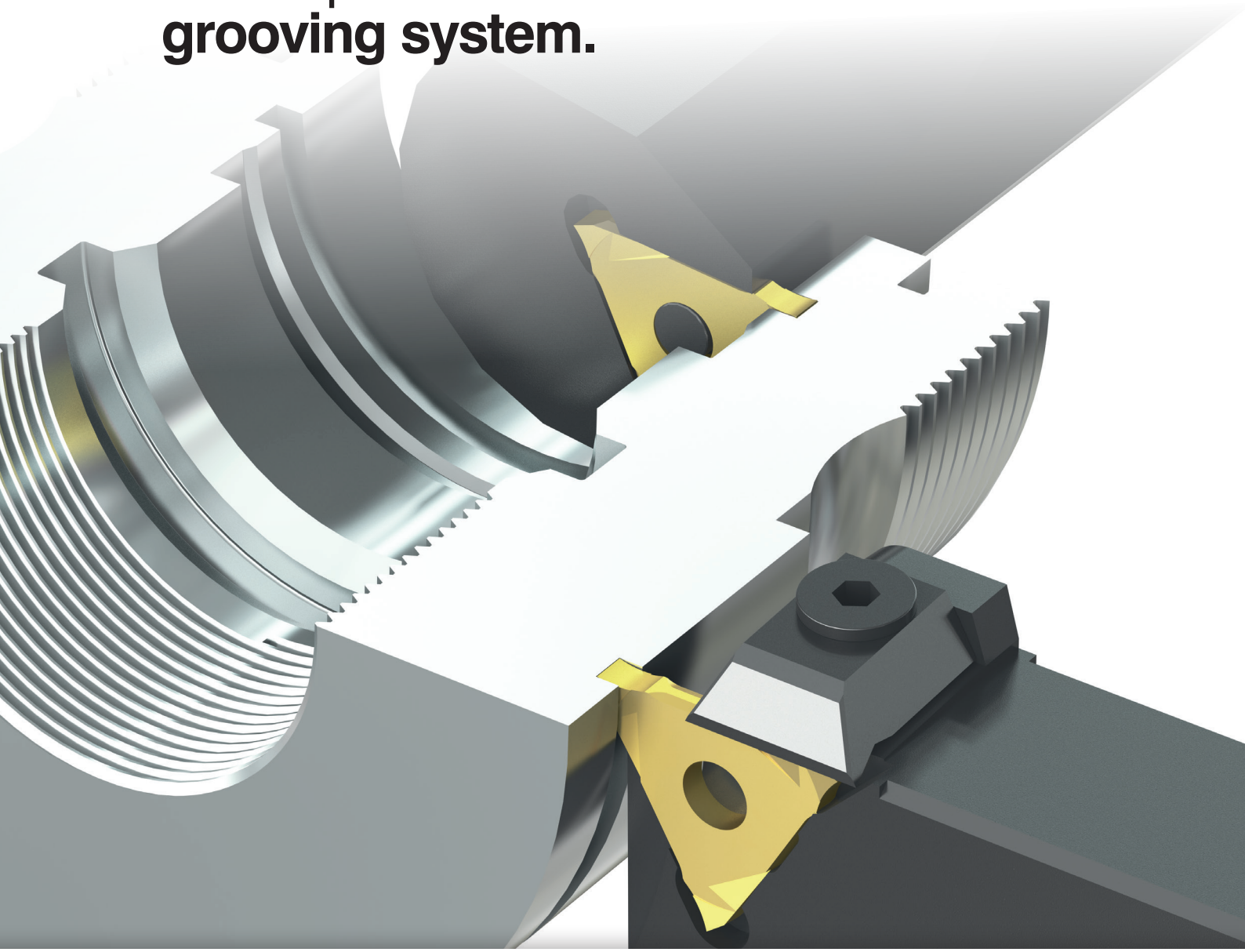

simturn E12

SIMTEK Turning Tools Type E12

Part Catalog

R20 US-Edition

Tools for
highest
expectations

Contact

SIMTEK USA Inc.
13 Fairfield Ave. Suite 104
US 07424-1257 Little Falls, NJ

fon +1 862 757 8130
fax +1 862 757 8134
mail usa@simtek.com
web www.simtek.com/usa

© 2020 SIMTEK Group. All rights reserved. Errors, omissions and changes excepted. Reprint of this catalog, complete or in extracts, only with our prior written permission. precium is a product of the SIMTEK Group and exclusively distributed through the global SIMTEK Distribution Network. SIMTEK, simturn, simmill, and simcut are registered trademarks in the US and several other countries. „QR Code“ is a registered trademark of DENSO WAVE INCORPORATED. This document has been prepared in English. In the event a translation exists and there is a discrepancy, this English original shall prevail.

The Tool System Overview

Wide-spread grooving system.

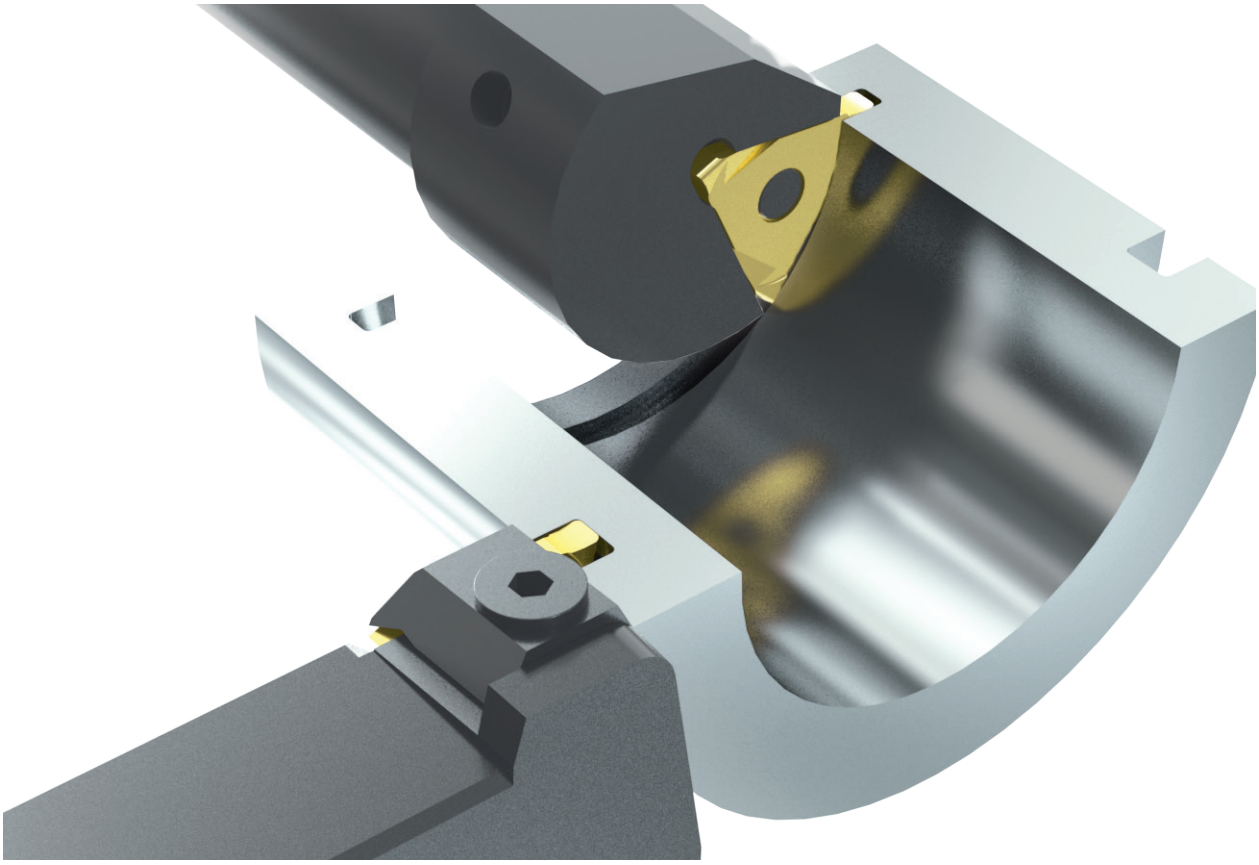

Tool system of triple-edged indexable carbide cutting insert and steel toolholders.

Possible depth of cut up to 8,0 mm (0.315“) for external applications. Range of ground cutting edge geometries available.

The System Details

Please read the general instructions for use on page 44

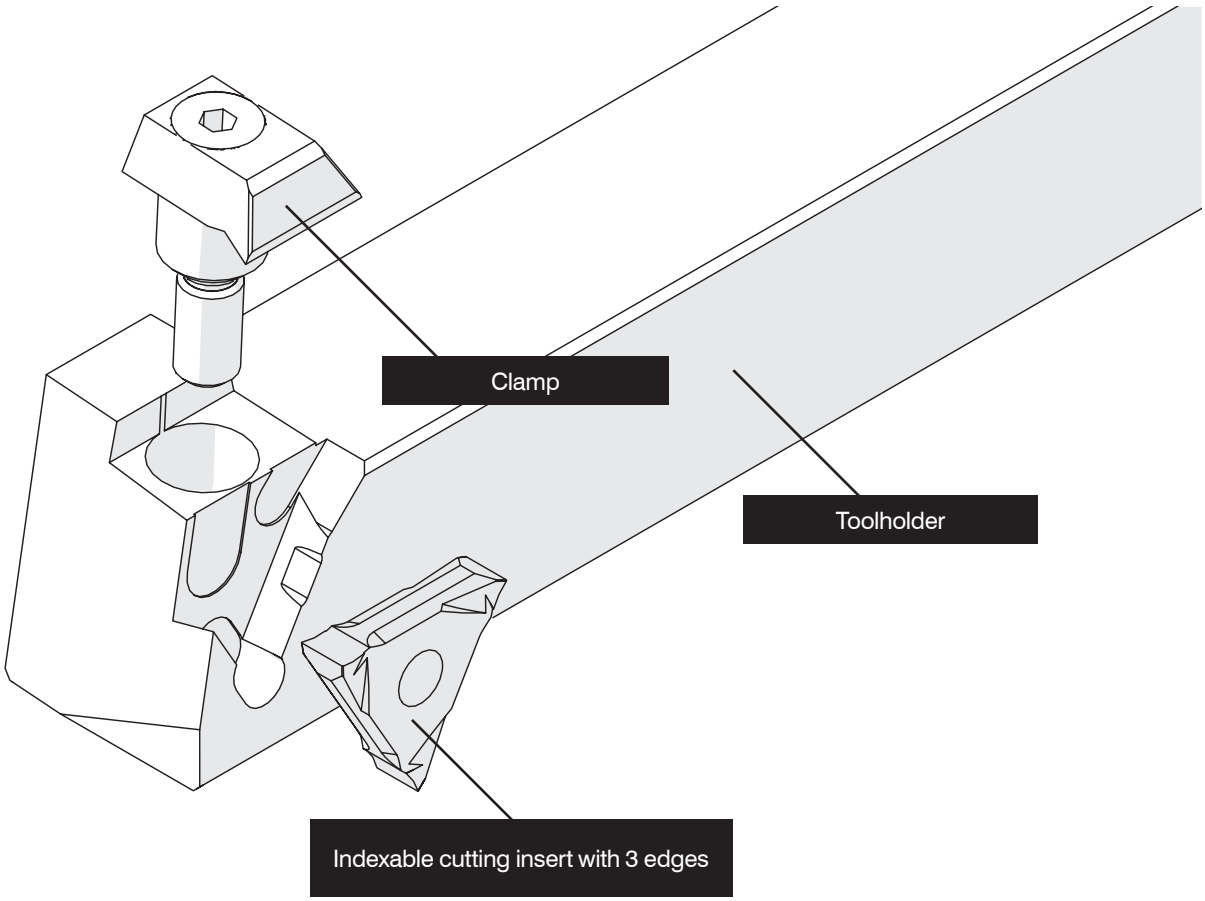

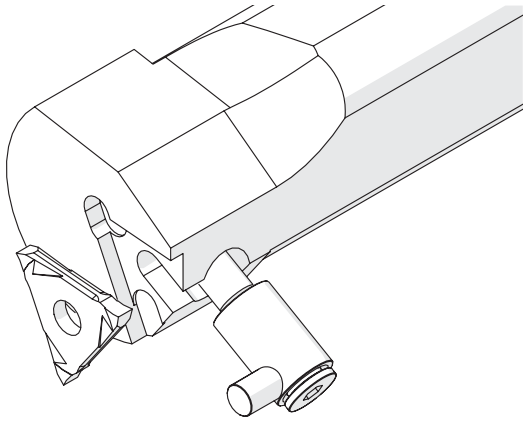

Available for internal and external applications

External
Maximum cutting depth 8,0 mm (0.315“)

Internal
As of bore diameter 46,0 mm (1.811“)

Standard Applications

As of page 16

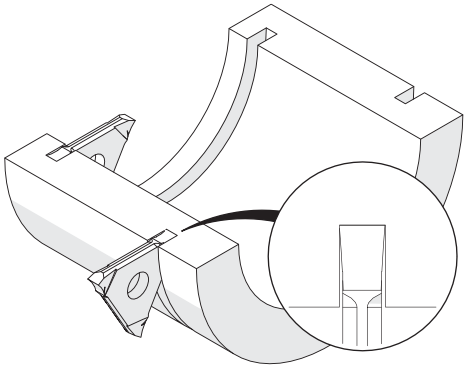

Grooving, Circlip Ring Grooves

As of page 23

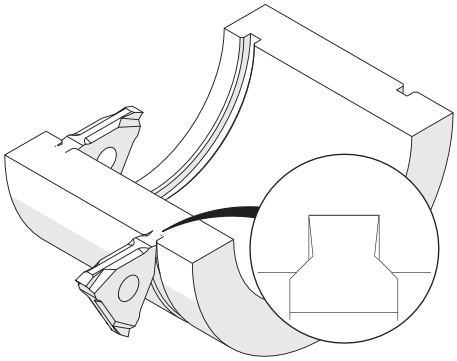

Grooving, Circlip Ring Grooves with Chamfer

As of page 25

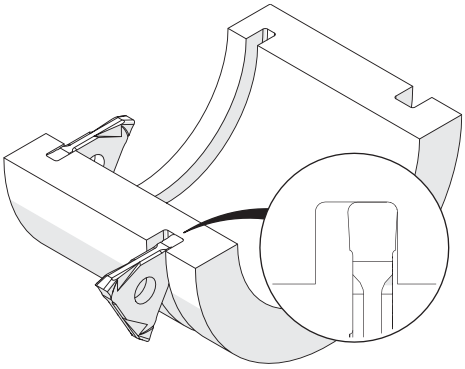

Grooving and Profiling

Page 27

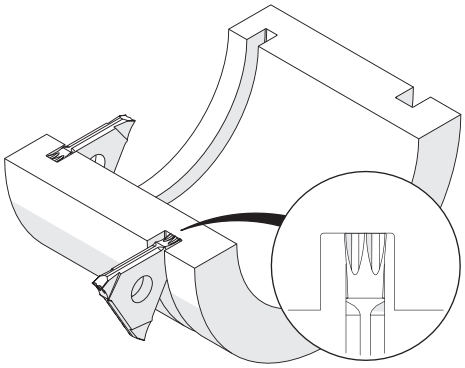

Grooving and Turning

Page 28

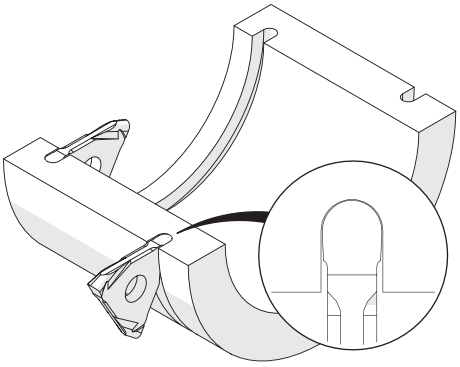

Grooving and Profiling, Full Radius

Page 29

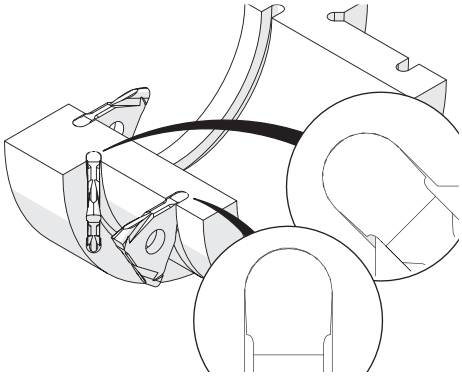

Corner Reliefs, Grooving and Profiling, Full Radius

Standard Applications

As of page 30

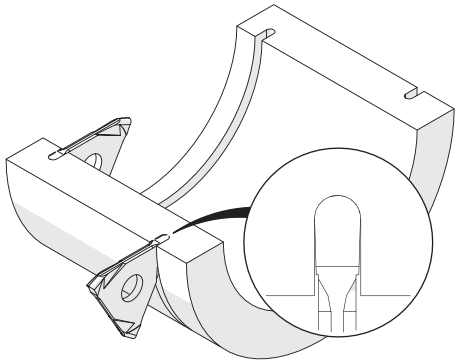

Grooving, Round-Wire Snap-Ring

As of page 32

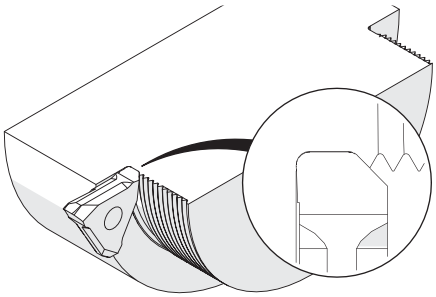

Thread Reliefs

Page 34

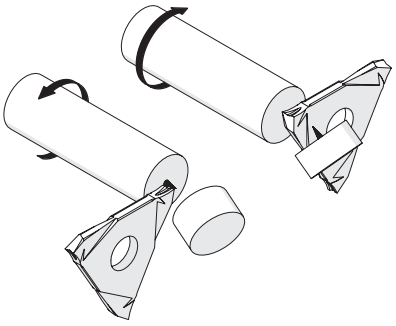

Parting off

Page 35

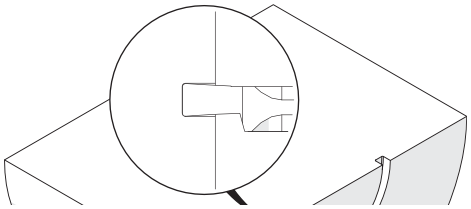

Face Grooving

Page 36

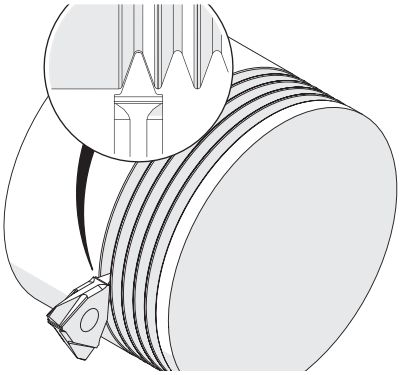

Poly-V Belt-Grooves

Toolholder, External Applications

Toolholder for external applications.

Tightening torque (screw)

6,0 Nm

TW ST R Legend 37

Scan QR-Code Or Visit **www.simtek.info/cp/487**

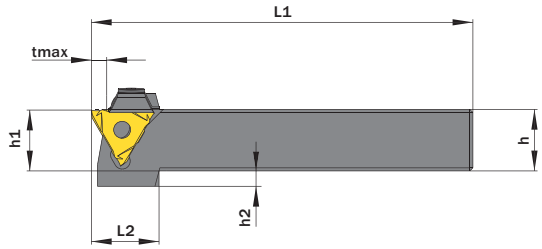

Measures f and w depend on cutting insert

Drawing shows: E60.2020.04 R

tmax depends on workpiece diameter (Ød)	tmax
≤ Ø40,0 mm / ≤ Ø1.574"	6,0 mm / 0.236"
> Ø40,0 mm / > Ø1.574"	4,0 mm / 0,157"

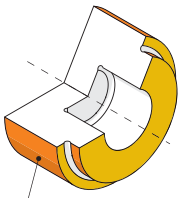

Mainly designed for these surfaces

Also possible depending on insert/fixation type

h mm	b mm	Part number	Webcode www.simtek.com/webcode	f1 mm	h1 js14 mm	h2 mm	L1 mm	L2 mm	tmax mm	w ≥ mm	w ≤ mm	Clamp	Connectcode www.simtek.com/ccode
▼ h = 12,0 mm													
12,0	12,0	**E60.1212.01 R/L**	R AFXZ L AG4T	10,5	12,0	13,0	100,0	24,0	4,0	0,5	2,0	E12.1-3	**E12.A1**
12,0	12,0	**E60.1212.23 R/L**	R ACFC L ADF8	10,0	12,0	13,0	100,0	24,0	6,0	1,0	2,5	E12.1-3	**E12.A2**
12,0	12,0	**E60.1212.02 R/L**	R AD50 L AAPU	9,5	12,0	13,0	100,0	24,0	6,0	2,0	3,0	E12.1-3	**E12.B2**
12,0	12,0	**E60.1212.03 R/L**	R ABS4 L AG3U	8,5	12,0	13,0	100,0	24,0	6,0	3,0	4,0	E12.1-3	**E12.C3**
▼ h = 16,0 mm													
16,0	16,0	**E60.1616.01 R/L**	R ABB3 L AAY4	14,5	16,0	9,0	125,0	22,0	4,0	0,5	2,0	E16.1-4	**E12.A1**
16,0	16,0	**E60.1616.23 R/L**	R AE9Q L AM6Z	14,0	16,0	9,0	125,0	22,0	6,0	1,0	2,5	E16.1-4	**E12.A2**
16,0	16,0	**E60.1616.02 R/L**	R AEHG L AAE1	13,5	16,0	9,0	125,0	22,0	6,0	2,0	3,0	E16.1-4	**E12.B2**
16,0	16,0	**E60.1616.03 R/L**	R AE36 L AGDN	12,5	16,0	9,0	125,0	22,0	6,0	3,0	4,0	E16.1-4	**E12.C3**
16,0	16,0	**E60.1616.04 R/L**	R AF0S L AHT0	11,5	16,0	9,0	125,0	22,0	6,0	4,0	6,3	E16.1-4	**E12.D4**
▼ h = 20,0 mm													
20,0	20,0	**E60.2020.01 R/L**	R ADXD L AG3J	18,5	20,0	5,0	125,0	21,0	4,0	0,5	2,0	E20.1-4	**E12.A1**
20,0	20,0	**E60.2020.23 R/L**	R AMQ8 L AM2P	18,0	20,0	5,0	125,0	21,0	6,0	1,0	2,5	E20.1-4	**E12.A2**
20,0	20,0	**E60.2020.02 R/L**	R APY1 L APX5	17,5	20,0	5,0	125,0	21,0	6,0	2,0	3,0	E20.1-4	**E12.B2**
20,0	20,0	**E60.2020.03 R/L**	R APWN L ANGC	16,5	20,0	5,0	125,0	21,0	6,0	3,0	4,0	E20.1-4	**E12.C3**
20,0	20,0	**E60.2020.04 R/L**	R AH26 L AAWF	14,8	20,0	5,0	125,0	21,0	6,0	4,0	6,3	E20.1-4	**E12.D4**

Related Items can be found on the following page as well! Continued Table

Order example: **E60.2020.01 R** (R = Right hand version)

Spare screw: E M6x25 SW3

Toolholder, External Applications

Toolholder for external applications.

Tightening torque (screw)

6,0 Nm

TW ST | R | Legend 37

Scan QR-Code | Or Visit **www.simtek.info/cp/863**

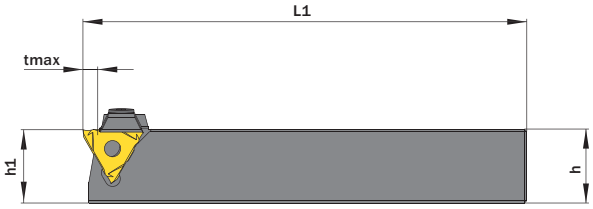

tmax depends on workpiece diameter (Ød)	tmax
≤ Ø40,0 mm / ≤ Ø1.574"	6,0 mm / 0.236"
> Ø40,0 mm / > Ø1.574"	4,0 mm / 0.157"

Measures f and w depend on cutting insert

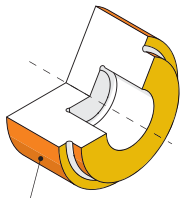

Mainly designed for these surfaces

Also possible depending on insert/fixation type

Drawing shows: E60.2525.04 R

h mm	b mm	Partnumber	Webcode www.simtek.com/webcode	f1 mm	h1 js14 mm	L1 mm	tmax mm	w ≥ mm	w ≤ mm	Clamp	Connectcode www.simtek.com/ccode
▼ h = 25,0 mm											
25,0	25,0	**E60.2525.01 R/L**	R AA2H L ADW8	23,5	25,0	150,0	4,0	0,5	2,0	E20.1-4	E12.A1
25,0	25,0	**E60.2525.23 R/L**	R AGZ9 L AMA6	23,1	25,0	150,0	6,0	1,0	2,5	E20.1-4	E12.A2
25,0	25,0	**E60.2525.02 R/L**	R AG39 L AEV0	22,5	25,0	150,0	6,0	2,0	3,0	E20.1-4	E12.B2
25,0	25,0	**E60.2525.03 R/L**	R AD97 L APFP	21,5	25,0	150,0	6,0	3,0	4,0	E20.1-4	E12.C3
25,0	25,0	**E60.2525.04 R/L**	R APYG L ABNF	19,8	25,0	150,0	6,0	4,0	6,3	E20.1-4	E12.D4
▼ h = 32,0 mm											
32,0	32,0	**E60.3232.01 R/L**	R AD0M L APH0	30,5	32,0	170,0	4,0	0,5	2,0	E20.1-4	E12.A1
32,0	32,0	**E60.3232.02 R/L**	R AMKM L AD7B	29,5	32,0	170,0	6,0	2,0	3,0	E20.1-4	E12.B2
32,0	32,0	**E60.3232.03 R/L**	R AHJQ L AAXU	28,5	32,0	170,0	6,0	3,0	4,0	E20.1-4	E12.C3
32,0	32,0	**E60.3232.04 R/L**	R AA5F L AN3K	26,8	32,0	170,0	6,0	4,0	6,3	E20.1-4	E12.D4

Continued Table **Related Items can be found on the previous page as well!**

Order example: **E60.2525.01 R** (R = Right hand version)

Spare screw: E M6x25 SW3

Toolholder, External Applications

Toolholder for external applications and cutting depths up 8,0 mm.

TW ST R Legend 37

Scan QR-Code Or Visit www.simtek.info/cp/489

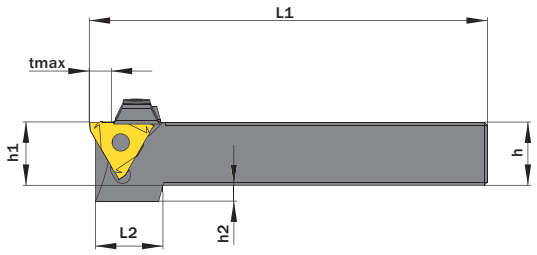

Measures f and w depends on cutting insert

Drawing shows: E90.2020.02 R

tmax depends from Workpiece diameter (Ød)	tmax for E90.****.01	tmax for E90.****.02, 03, 04
up to 0,787"	0,315"	-
≤ Ø4,921"	-	0,315"

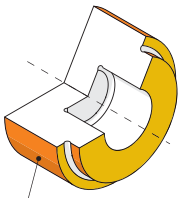

Mainly designed for these Surfaces

Also possible depending on insert/fixation type

h mm	b mm	Part number	Webcode www.simtek.com/webcode	f1 mm	h1 js14 mm	h2 mm	L1 mm	L2 mm	tmax mm	w ≥ mm	w ≤ mm	Clamp	Connectcode www.simtek.com/ccode
▼ h = 12,0 mm													
12,0	12,0	**E90.1212.01 R/L**	R AJSB L AF2Z	10,5	12,0	13,0	100,0	24,0	8,0	0,5	2,0	E12.1-3	**E12.A1**
▼ h = 16,0 mm													
16,0	16,0	**E90.1616.01 R/L**	R AH24 L AK3A	14,5	16,0	9,0	125,0	24,0	8,0	0,5	2,0	E16.1-4	**E12.A1**
16,0	16,0	**E90.1616.02 R/L**	R AGNB L AE8N	13,5	16,0	9,0	125,0	22,0	8,0	1,9	3,0	E16.1-4	**E12.B2**
▼ h = 20,0 mm													
20,0	20,0	**E90.2020.01 R/L**	R AGHV L AGGM	18,5	20,0	5,0	125,0	22,0	8,0	0,5	2,0	E20.1-4	**E12.A1**
20,0	20,0	**E90.2020.02 R/L**	R AG14 L AK5V	17,5	20,0	5,0	125,0	22,0	8,0	1,9	3,0	E20.1-4	**E12.B2**
20,0	20,0	**E90.2020.03 R/L**	R AFJM L ACET	16,5	20,0	5,0	125,0	22,0	8,0	3,0	4,0	E20.1-4	**E12.C3**
20,0	20,0	**E90.2020.04 R/L**	R AJ82 L AFDT	14,8	20,0	5,0	125,0	22,0	8,0	4,0	5,3	E20.1-4	**E12.D4**
▼ h = 25,0 mm													
25,0	25,0	**E90.2525.01 R/L**	R AAX9 L AHAH	23,5	25,0	-	150,0	-	8,0	0,5	2,0	E20.1-4	**E12.A1**
25,0	25,0	**E90.2525.02 R/L**	R AAYW L AHA6	22,5	25,0	-	150,0	-	8,0	1,9	3,0	E20.1-4	**E12.B2**
25,0	25,0	**E90.2525.03 R/L**	R AK6S L AP3W	21,5	25,0	-	150,0	-	8,0	3,0	4,0	E20.1-4	**E12.C3**
25,0	25,0	**E90.2525.04 R/L**	R ACQG L AMCD	19,8	25,0	-	150,0	-	8,0	4,0	5,3	E20.1-4	**E12.D4**
▼ h = 32,0 mm													
32,0	32,0	**E90.3232.01 R/L**	R AM6M L AEA0	30,5	32,0	-	170,0	-	8,0	0,5	2,0	E20.1-4	**E12.A1**
32,0	32,0	**E90.3232.02 R/L**	R ADM4 L AJ7Y	29,5	32,0	-	170,0	-	8,0	1,9	3,0	E20.1-4	**E12.B2**
32,0	32,0	**E90.3232.03 R/L**	R AMZ5 L AN4K	28,5	32,0	-	170,0	-	8,0	3,0	4,0	E20.1-4	**E12.C3**
32,0	32,0	**E90.3232.04 R/L**	R AA25 L AJB9	26,8	32,0	-	170,0	-	8,0	4,0	5,3	E20.1-4	**E12.D4**

Order example: **E90.2020.02 R** (R = Right hand version)

Spare screw: E M6x25 SW3

Toolholder, External Applications

Toolholder for external applications.

Tightening torque (screw)

6,0 Nm

TW ST R Legend **37**

Scan **QR-Code** Or Visit **www.simtek.info/cp/492**

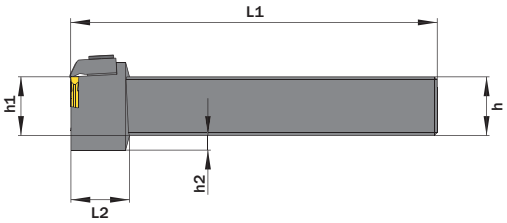

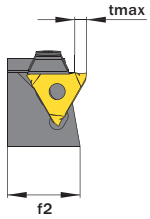

tmax depends on workpiece diameter (Ød)	tmax
≤ Ø40,0 mm / ≤ Ø1.575"	4,0 mm / 0.158"
> Ø40,0 mm / > Ø1.575"	6,0 mm / 0.236"

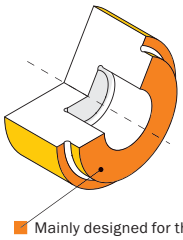

Mainly designed for these surfaces

Also possible depending on fixation type

Drawing shows: E69.2020.03 R

h mm	b mm	Part number	Webcode www.simtek.com/webcode	f mm	f2 mm	h1 js14 mm	h2 mm	L1 mm	L2 mm	tmax mm	w ≥ mm	w ≤ mm	Clamp	Connectcode www.simtek.com/ccode
▼ h = 20,0 mm														
20,0	20,0	**E69.2020.01 R/L**	R ANHQ L AATF	27,0	24,5	20,0	5,0	125,0	20,0	4,0	0,5	2,0	E20.1-4	**E12.A1**
20,0	20,0	**E69.2020.02 R/L**	R APFK L AGGY	27,0	24,5	20,0	5,0	125,0	20,0	6,0	2,0	3,0	E20.1-4	**E12.B2**
20,0	20,0	**E69.2020.03 R/L**	R AKW8 L AH05	27,0	24,5	20,0	5,0	125,0	20,0	6,0	3,0	4,0	E20.1-4	**E12.C3**
20,0	20,0	**E69.2020.04 R/L**	R AM7V L AFFX	27,0	24,5	20,0	5,0	125,0	20,0	6,0	4,0	6,3	E20.1-4	**E12.D4**
▼ h = 25,0 mm														
25,0	25,0	**E69.2525.01 R/L**	R AJCG L AE5D	32,0	29,5	25,0	-	150,0	-	4,0	0,5	2,0	E20.1-4	**E12.A1**
25,0	25,0	**E69.2525.02 R/L**	R ADXZ L AAUK	32,0	29,5	25,0	-	150,0	-	6,0	2,0	3,0	E20.1-4	**E12.B2**
25,0	25,0	**E69.2525.03 R/L**	R AE5X L AD8H	32,0	29,5	25,0	-	150,0	-	6,0	3,0	4,0	E20.1-4	**E12.C3**
25,0	25,0	**E69.2525.04 R/L**	R AG37 L AFHN	32,0	29,5	25,0	-	150,0	-	6,0	4,0	6,3	E20.1-4	**E12.D4**

Order example: **E69.2020.02 R** (R = Right hand version)

Spare screw: E M6x25 SW3

Toolholder, Internal Applications

Toolholder for internal applications.

Tightening torque (screw)

6,0 Nm

TW ST R Legend **37**

Scan **QR-Code** Or Visit **www.simtek.info/cp/493**

Bore diameter (ØDmin)	tmax
Ø46 mm / Ø1.811"	2,0 mm / 0.078"
Ø50 mm / Ø1.968"	3,0 mm / 0.118"
Ø60 mm / Ø2.362"	4,0 mm / 0.157"
Ø100 mm / Ø3.937"	5,0 mm / 0.196"

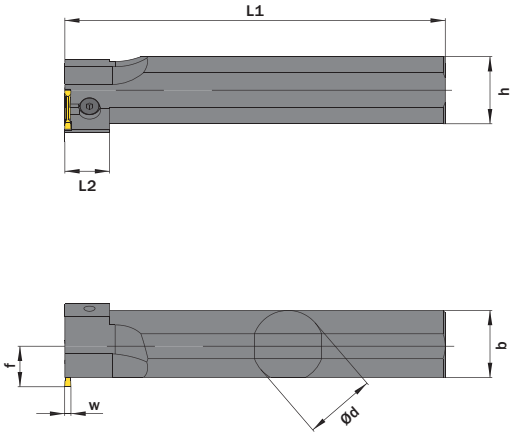

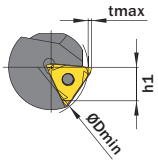

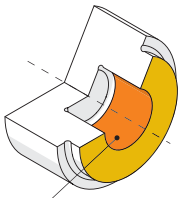

Mainly designed for these surfaces

Also possible depending on insert type

Drawing shows: E30.0032.02 R

Ød g6 mm	Part number	Webcode www.simtek.com/webcode	b mm	ØDmin (min. bore) mm	f mm	h mm	h1 js14 mm	L1 mm	L2 mm	w ≥ mm	w ≤ mm	Clamp	Connectcode www.simtek.com/ccode
▼ Ød = 25,0 mm													
25,0	**E30.0025.01 R/L**	R ADSN L AP39	25,0	46,0	19,0	23,0	11,5	170,0	20,0	0,5	2,0	E30.1-4	E12.A1
25,0	**E30.0025.02 R/L**	R ACM0 L AE7B	25,0	46,0	19,0	23,0	11,5	170,0	20,0	2,0	3,0	E30.1-4	E12.B2
25,0	**E30.0025.03 R/L**	R AHB6 L AHFE	25,0	46,0	19,0	23,0	11,5	170,0	20,0	3,0	4,0	E30.1-4	E12.C3
25,0	**E30.0025.04 R/L**	R AADX L ANEW	25,0	46,0	19,0	23,0	11,5	170,0	20,0	4,0	6,3	E30.1-4	E12.D4
▼ Ød = 32,0 mm													
32,0	**E30.0032.01 R/L**	R AH4Z L AGQB	30,0	46,0	20,0	30,0	15,0	200,0	20,0	0,5	2,0	E30.1-4	E12.A1
32,0	**E30.0032.02 R/L**	R AK56 L AC57	30,0	46,0	20,0	30,0	15,0	200,0	20,0	2,0	3,0	E30.1-4	E12.B2
32,0	**E30.0032.03 R/L**	R ADSM L AFS6	30,0	46,0	20,0	30,0	15,0	200,0	20,0	3,0	4,0	E30.1-4	E12.C3
32,0	**E30.0032.04 R/L**	R ACSM L ACYE	30,0	46,0	20,0	30,0	15,0	200,0	20,0	4,0	6,3	E30.1-4	E12.D4
▼ Ød = 40,0 mm													
40,0	**E30.0040.01 R/L**	R AGEG L AD3H	38,0	46,0	24,0	38,0	19,0	250,0	-	0,5	2,0	E30.1-4	E12.A1
40,0	**E30.0040.02 R/L**	R AJ7U L AEP5	38,0	46,0	24,0	38,0	19,0	250,0	-	2,0	3,0	E30.1-4	E12.B2
40,0	**E30.0040.03 R/L**	R AEKC L ADT8	38,0	46,0	24,0	38,0	19,0	250,0	-	3,0	4,0	E30.1-4	E12.C3
40,0	**E30.0040.04 R/L**	R ACM3 L AJ7G	38,0	46,0	24,0	38,0	19,0	250,0	-	4,0	6,3	E30.1-4	E12.D4

Order example: **E30.0025.01 R** (R = Right hand version)

Spare screw: E M6x25 SW3

Toolholder, External, Corner Reliefs

Toolholder for external corner reliefs.

Tightening torque (screw)
6,0 Nm

TW ST R Legend 37

Scan QR-Code Or Visit **www.simtek.info/cp/491**

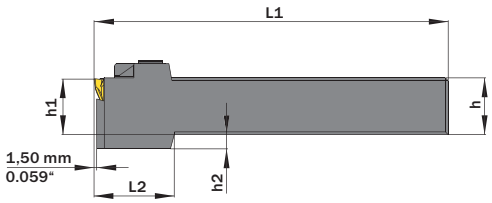

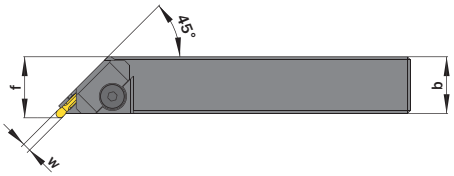

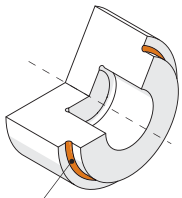

Mainly designed for these surfaces

Drawing shows: E09.2020.03 R

h mm	b mm	Part number	Webcode www.simtek.com/webcode	f mm	h1 js14 mm	h2 mm	L1 mm	L2 mm	w ≥ mm	w ≤ mm	Clamp	Connectcode www.simtek.com/ccode
▼ h = 20,0 mm												
20,0	20,0	**E09.2020.02 R/L**	R AD3B L AB9H	21,5	20,0	5,0	125,0	30,0	1,9	3,0	E09.1-4	E12.A2 | E12.B2
20,0	20,0	**E09.2020.03 R/L**	R AC9H L APDV	21,5	20,0	5,0	125,0	30,0	3,0	4,0	E09.1-4	E12.C3
20,0	20,0	**E09.2020.04 R/L**	R AK9N L AE7D	21,5	20,0	5,0	125,0	30,0	4,0	6,3	E09.1-4	E12.D4
▼ h = 25,0 mm												
25,0	25,0	**E09.2525.02 R/L**	R AEZA L ADD1	26,5	25,0	-	150,0	-	1,9	3,0	E09.1-4	E12.A2 | E12.B2
25,0	25,0	**E09.2525.03 R/L**	R AFYU L ABUY	26,5	25,0	-	150,0	-	3,0	4,0	E09.1-4	E12.C3
25,0	25,0	**E09.2525.04 R/L**	R AJCA L AN1F	26,5	25,0	-	150,0	-	4,0	6,3	E09.1-4	E12.D4
▼ h = 32,0 mm												
32,0	32,0	**E09.3232.02 R/L**	R AD3N L AMD5	33,5	32,0	-	170,0	-	1,9	3,0	E09.1-4	E12.A2 | E12.B2
32,0	32,0	**E09.3232.03 R/L**	R AJ6X L APZS	33,5	32,0	-	170,0	-	3,0	4,0	E09.1-4	E12.C3
32,0	32,0	**E09.3232.04 R/L**	R AP4P L APG0	33,5	32,0	-	170,0	-	4,0	6,3	E09.1-4	E12.D4

Order example: **E09.2525.02 R** (R = Right hand version)

Spare screw: E M6x25 SW3

Toolholder, External Applications

First choice for Traub double spindle machines (e.g. TNL12).

Tightening torque (screw)
4,5 Nm

TW ST R Legend **37**

Scan **QR-Code** Or Visit **www.simtek.info/cp/1005**

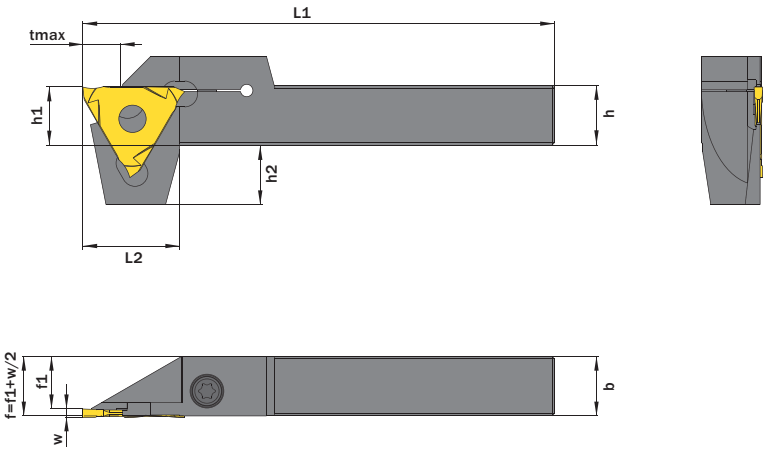

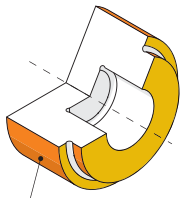

Mainly designed for these surfaces

Also possible depending on insert/fixation type

Drawing shows: E68.1212.08 R

h mm	b mm	Part number	Webcode www.simtek.com/webcode	f1 mm	h1 js14 mm	h2 mm	L1 mm	L2 mm	tmax mm	w ≥ mm	w ≤ mm	Screw	Screw driver	Connectcode www.simtek.com/ccode
▼ h = 12,0 mm														
12,0	12,0	**E68.1212.08 R/L**	R AGVQ L APZ7	11,0	12,0	12,0	95,0	19,5	8,0	0,5	1,5	EM4x12T15F	T15F	E68.A1
12,0	12,0	**E68.1212.11 R/L**	R AHGA L ACTS	10,7	12,0	12,0	95,0	19,5	8,0	1,0	2,0	EM4x12T15F	T15F	E68.A1
▼ h = 16,0 mm														
16,0	16,0	**E68.1616.11 R/L**	R AE95 L AJXG	14,7	16,0	16,0	95,0	19,5	8,0	0,5	2,0	EM4x12T15F	T15F	E68.A1

Order example: **E68.1212.11 R** (R = Right hand version)

Cassette for Modular Tool System TOA

For use on SIMTEK base toolholder with polygon shank according to ISO 26623.

Tightening torque (screw)
6,0 Nm

TW ST R Legend **37**

Scan **QR-Code** Or Visit **www.simtek.info/cp/1180**

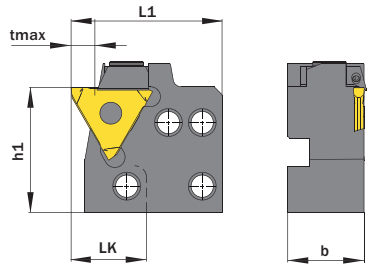

tmax depends on workpiece diameter (Ød)	tmax
< Ø40,0 mm / ≤ Ø1.575"	6,0 mm / 0.236"

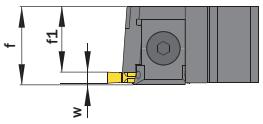

Measures f and w depend on cutting insert

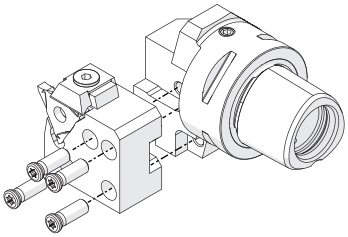

Screw for cassette mounting
T M5x15 T20R

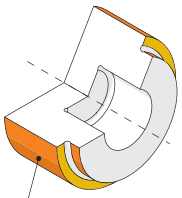

Mainly designed for these surfaces

Also possible depending on insert/fixation type

Drawing shows: TOA.E60.19.02 R

w ≥ mm	w ≤ mm	Part number	Webcode www.simtek.com/webcode	b mm	f1 mm	h1 mm	LK mm	L1 mm	tmax mm	Clamp	Connectcode www.simtek.com/ccode	Adaptcode
▼ Connectcode = E12.A1												
0,5	2,0	**TOA.E60.19.01 R/L**	R AY99 L AY98	19,2	17,7	31,6	19,0	37,9	6,0	E16.1-4 ICR/L	E12.A1	TOA
▼ Connectcode = E12.A2												
1,0	2,5	**TOA.E60.19.23 R/L**	R AZAF L AZAE	19,2	17,2	31,6	19,0	37,9	6,0	E16.1-4 ICR/L	E12.A2	TOA
▼ Connectcode = E12.B2												
2,0	3,0	**TOA.E60.19.02 R/L**	R AZAB L AZAA	19,2	16,7	31,6	19,0	37,9	6,0	E16.1-4 ICR/L	E12.B2	TOA
▼ Connectcode = E12.C3												
3,0	4,0	**TOA.E60.19.03 R/L**	R AZAD L AZAC	19,2	15,7	31,6	19,0	37,9	6,0	E16.1-4 ICR/L	E12.C3	TOA
▼ Connectcode = E12.D4												
4,0	6,3	**TOA.E60.19.04 R/L**	R A08W L A08X	19,2	14,0	31,6	19,0	37,9	6,0	E16.1-4 ICR/L	E12.D4	TOA

Order example: **TOA.E60.19.03 R** (R = Right hand version)

Height-Adjustable Cassette for back operations

Cassette for height-adjustable back operations tools.
Compatible to TOG-system by precium.

TW ST Legend 37

Scan QR-Code Or Visit www.simtek.info/cp/977

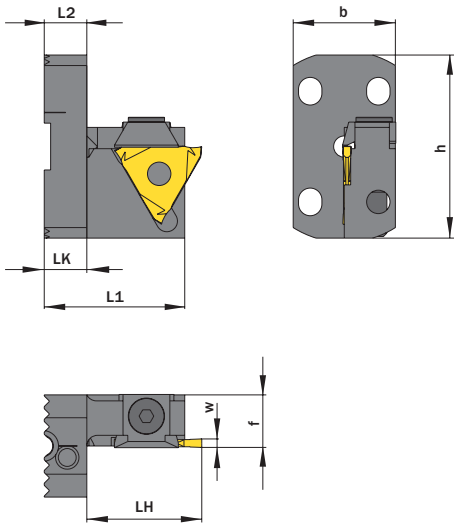

Drawing shows: TOG.K.E12.C1 01 R

w mm	Part number	Webcode www.simtek.com/webcode	b mm	h mm	f mm	L1 mm	L2 mm	LK mm	LH mm	Clamp	Connectcode www.simtek.com/ccode
1,5	**TOG.K.E12.C1.01 R**	AT3W	24,0	43,0	12,35	33,0	10,0	10,0	27,0	E12.1-3	E12.A1

Order example: **TOG.K.E12.C1.01 R** (R = Right hand version)

Spare screw: E M6x25 SW3

Grooving, Circlip Ring Grooves, slim widths, with reduced Cutting depth

Circlip ring grooves comp. to DIN 471/472 and DIN 983/984.
Reduced cutting depth.

Cutting parameters (start)	
f **0,04 mm/U**	Vc **Page 40**

Suitable toolholders on page
7, 8, 9, 10, 11, 12, 14, 15

SP HM Legend **37**

Scan **QR-Code** Or Visit **www.simtek.info/cp/499**

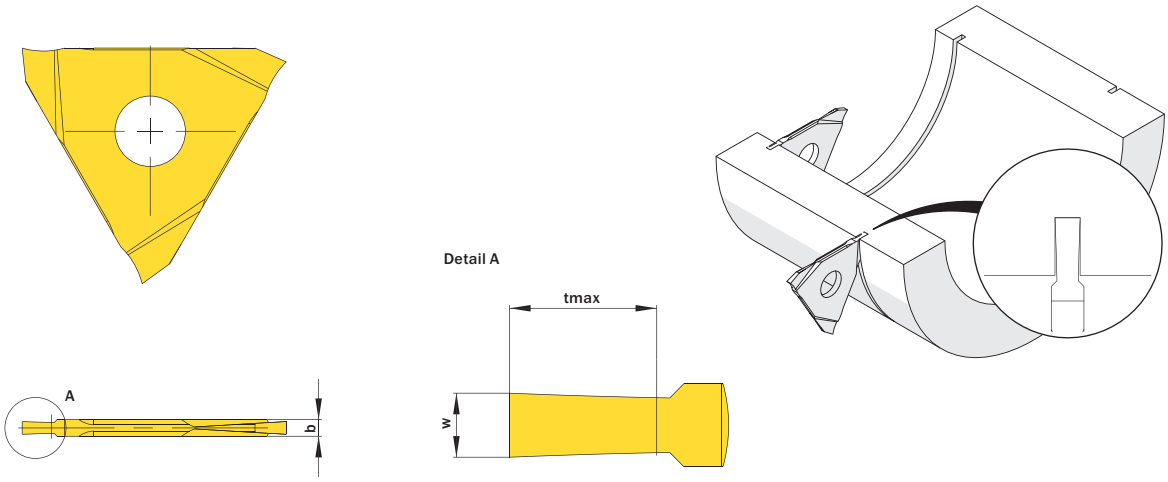

Drawing shows: E12.1094.00 Z

b ±0,02 mm	Nominal width of groove mm	Part number	Webcode www.simtek.com/webcode	Our first choice P K M N S	tmax mm	w -0,05 mm	Connectcode www.simtek.com/ccode
1,3	0,34	**E12.1034.00 Z**	AHE9	X808 X408	0,6	0,4	E12.A1|E12.A2
1,3	0,44	**E12.1044.00 Z**	AJAV	X808 X408	0,7	0,5	E12.A1|E12.A2
1,3	0,5	**E12.1050.00 Z**	ANE0	X808 X408	0,9	0,57	E12.A1|E12.A2
1,3	0,54	**E12.1054.00 Z**	AHZF	X808 X408	0,8	0,6	E12.A1|E12.A2
1,3	0,6	**E12.1060.00 Z**	APXN	X808 X408	1,1	0,67	E12.A1|E12.A2
1,3	0,64	**E12.1064.00 Z**	AC2C	X808 X408	1,0	0,7	E12.A1|E12.A2
1,3	0,7	**E12.1070.00 Z**	AD4M	X808 X408	1,7	0,77	E12.A1|E12.A2
1,3	0,74	**E12.1074.00 Z**	ANH3	X808 X408	1,7	0,8	E12.A1|E12.A2
1,3	0,8	**E12.1080.00 Z**	ADDH	X808 X408	2,3	0,87	E12.A1|E12.A2
1,3	0,85	**E12.1085.00 Z**	AAUW	X808 X408	2,3	0,91	E12.A1|E12.A2
1,3	0,9	**E12.1090.00 Z**	ADHX	X808 X408	2,3	0,97	E12.A1|E12.A2
1,3	0,94	**E12.1094.00 Z**	AMUD	X808 X408	2,3	1,0	E12.A1|E12.A2
1,3	1,0	**E12.1100.00 Z**	AB93	X808 X408	2,3	1,07	E12.A1|E12.A2
1,3	1,05	**E12.1105.00 Z**	AH3J	X808 X408	2,3	1,12	E12.A1|E12.A2
1,3	1,1	**E12.1115.00 Z**	AEHY	X808 X408	2,5	1,22	E12.A1|E12.A2

Order example: **E12.1094.00 Z X808** (X808 = Grade)

Grooving, Circlip Ring Grooves, slim widths

Circlip ring grooves comp. to DIN 471/472 and DIN 983/984.

Cutting parameters (start)	
f **0,04 mm/U**	Vc **Page 40**

Suitable toolholders on page
7, 8, 9, 10, 11, 12, 14, 15

SP HM Legend **37**

Scan **QR-Code** Or Visit **www.simtek.info/cp/498**

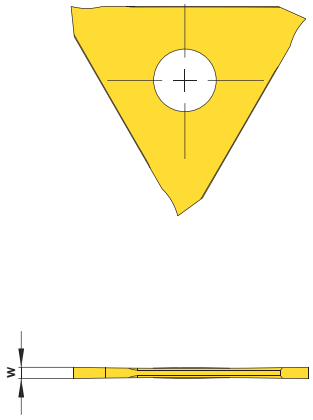

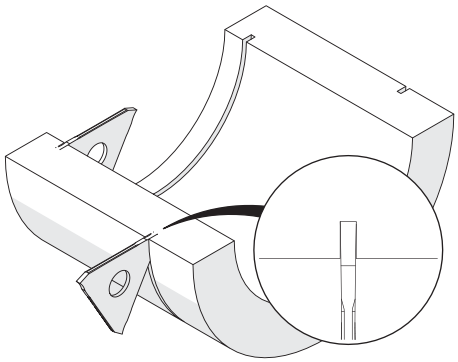

Drawing shows: E12.0100.00 H

Nominal width of groove mm	Part number	Webcode www.simtek.com/webcode	Our first choice P K M N S	w -0,05 mm	Connectcode www.simtek.com/ccode
0,5	**E12.0050.00 H**	AM9A	X808 X408	0,57	E12.A1
0,6	**E12.0060.00 H**	ABMF	X808 X408	0,67	E12.A1
0,7	**E12.0070.00 H**	AHDK	X808 X408	0,77	E12.A1
0,8	**E12.0080.00 H**	AKMH	X808 X408	0,87	E12.A1
0,9	**E12.0090.00 H**	AA2Z	X808 X408	0,97	E12.A1
1,0	**E12.0100.00 H**	APFD	X808 X408	1,07	E12.A1 | E12.A2

Order example: **E12.0100.00 H X808** (X808 = Grade)

Grooving, Circlip Ring Grooves

Circlip ring grooves comp. to DIN 471/472 and DIN 983/984.

Cutting parameters (start)	
f **0,04 mm/U**	Vc **Page 40**

Suitable toolholders on page
7, 8, 9, 10, 11, 12, 14, 15

SP HM Legend **37**

Scan **QR-Code** Or Visit **www.simtek.info/cp/500**

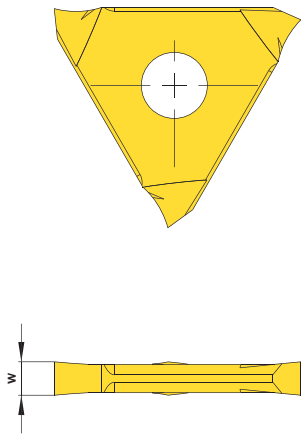

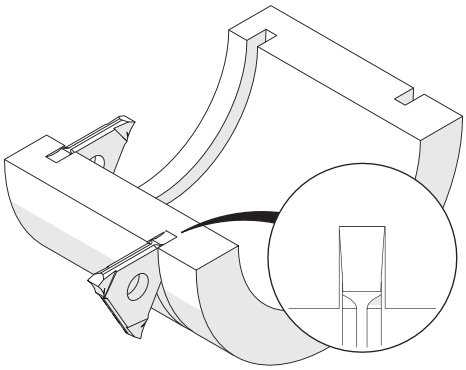

Drawing shows: E12.0265.00 G

Nominal width of groove mm	Part number	Webcode www.simtek.com/webcode	Our first choice P K M N S	w -0,05 mm	Connectcode www.simtek.com/ccode
1,1	**E12.0110.00 G**	AN0Z	X800 X600	1,24	E12.A1 | E12.A2
1,3	**E12.0130.00 G**	AG7C	X800 X600	1,44	E12.A1 | E12.A2
1,6	**E12.0160.00 G**	AE2Y	X800 X600	1,74	E12.A1 | E12.A2
1,85	**E12.0185.00 G**	AMUJ	X800 X600	1,99	E12.A1 | E12.A2
2,15	**E12.0215.00 G**	ANBG	X800 X600	2,29	E12.A2 | E12.B2
2,65	**E12.0265.00 G**	AKPW	X800 X600	2,79	E12.B2
3,15	**E12.0315.00 G**	AFFJ	X800 X600	3,29	E12.C3
4,15	**E12.0415.00 G**	AEBD	X800 X600	4,29	E12.D4
5,15	**E12.0515.00 G**	AJMV	X800 X600	5,29	E12.D4

Order example: **E12.0110.00 G X800** (X800 = Grade)

simtek individual | E12. w, 1/100 mm, 4 Digits . R, 1/100 mm , 3 Digits Tolerance

Example Part number: **E12.0156.015 XN**

Grooving

For general grooving.

Cutting parameters (start)	
f **0,04 mm/U**	Vc **Page 40**

Suitable toolholders on page
7, 8, 9, 10, 11, 12, 14, 15

SP HM Legend **37**

Scan **QR-Code** Or Visit **www.simtek.info/cp/1249**

This page contains inch tools! These tools are indicated by **inch** on the right hand side.

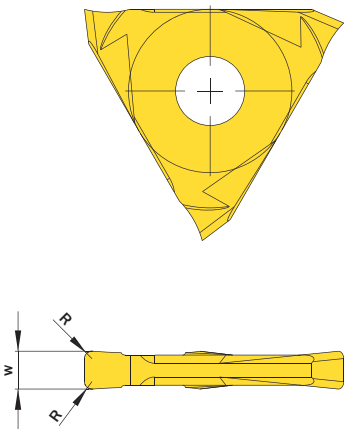

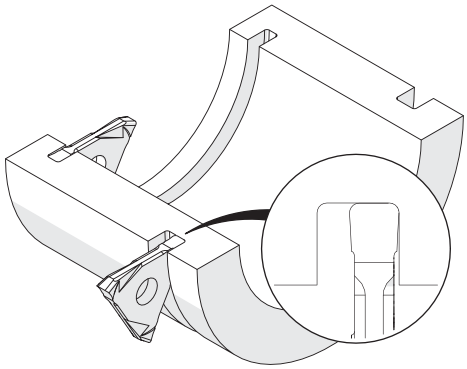

Drawing shows: E12.0300.06 N

w +0,02 inch	R inch	Part number	Webcode www.simtek.com/webcode	Our first choice P K M N S	Connectcode www.simtek.com/ccode	
▼ w = 0.046“						
0.046“	-	**E12.0117.00 G**	AJEW	X800 X600	E12.A1|E12.A2	inch
▼ w = 0.056“						
0.056“	-	**E12.0142.00 G**	AF62	X800 X600	E12.A1|E12.A2	inch
▼ w = 0.062“						
0.062“	-	**E12.0157.00 G**	AC0A	X800 X600	E12.A1|E12.A2	inch
▼ w = 0.094“						
0.094“	-	**E12.0238.00 G**	AFU1	X800 X600	E12.B2	inch
▼ w = 0.125“						
0.125“	-	**E12.0318.00 G**	ADJ8	X800 X600	E12.C3	inch

Order example: **E12.0142.00 G X800** (X800 = Grade)

Grooving, Circlip Ring Grooves, with ground chip form channel

Circlip ring grooves comp. to DIN 471/472 and DIN 983/984.
With ground chip form channel.

Cutting parameters (start)	
f **0,08 mm/U**	Vc **Page 40**

Suitable toolholders on page
7, 8, 9, 10, 11, 12, 14, 15

SP HM Legend **37**

Scan **QR-Code** Or Visit **www.simtek.info/cp/503**

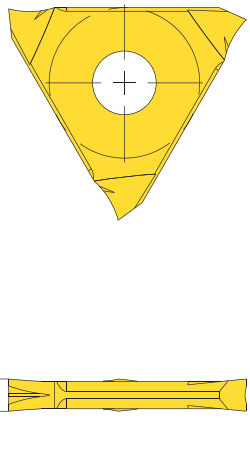

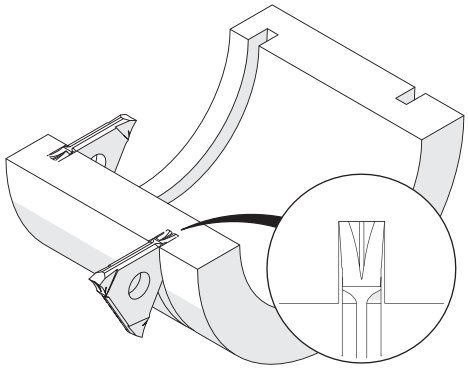

Drawing shows: E12.0265.11 K

Nominal width of groove mm	Part number	Webcode www.simtek.com/webcode	Our first choice P K M N S	w -0,05 mm	Connectcode www.simtek.com/ccode
1,1	**E12.0110.11 K**	AJBT	X800 X600	1,24	E12.A1 | E12.A2
1,3	**E12.0130.11 K**	AJJ3	X800 X600	1,44	E12.A1 | E12.A2
1,6	**E12.0160.11 K**	ACKU	X800 X600	1,74	E12.A1 | E12.A2
1,85	**E12.0185.11 K**	AK7B	X800 X600	1,99	E12.A1 | E12.A2
2,15	**E12.0215.11 K**	AH5U	X800 X600	2,29	E12.A2 | E12.B2
2,65	**E12.0265.11 K**	AH76	X800 X600	2,79	E12.B2
3,15	**E12.0315.11 K**	AE79	X800 X600	3,29	E12.C3

Order example: **E12.0185.11 K X800** (X800 = Grade)

Grooving, Circlip Ring Grooves, with 0° rake angle

Circlip ring grooves comp. to DIN 471/472 and DIN 983/984.
With 0° rake angle.

Cutting parameters (start)	
f **0,04 mm/U**	Vc **Page 40**

Suitable toolholders on page
7, 8, 9, 10, 11, 12, 14, 15

SP HM Legend **37**

Scan **QR-Code** Or Visit **www.simtek.info/cp/502**

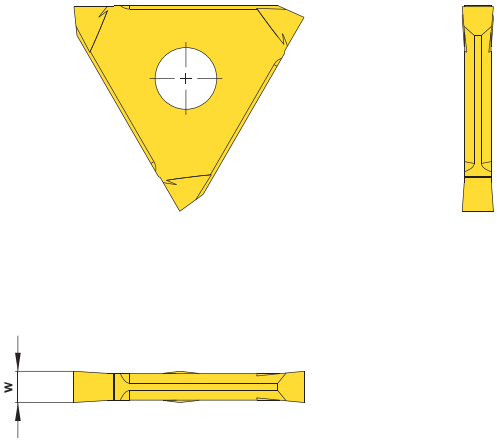

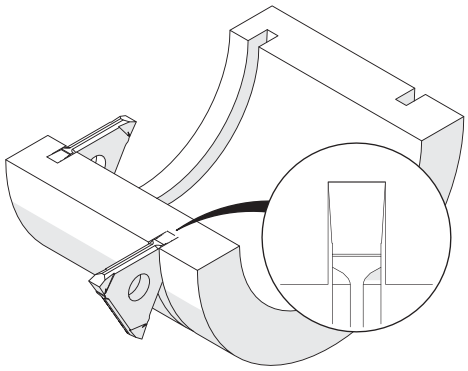

Drawing shows: E12.0265.00 GU

Nominal width of groove mm	Part number	Webcode www.simtek.com/webcode	Our first choice P	K	M	N	S	w -0,05 mm	Connectcode www.simtek.com/ccode
1,1	**E12.0110.00 GU**	AAEQ	X808		X408			1,24	E12.A1|E12.A2
1,3	**E12.0130.00 GU**	AFC2	X808		X408			1,44	E12.A1|E12.A2
1,6	**E12.0160.00 GU**	AK23	X808		X408			1,74	E12.A1|E12.A2
1,85	**E12.0185.00 GU**	ABVN	X808		X408			1,99	E12.A1|E12.A2
2,15	**E12.0215.00 GU**	AMH2	X808		X408			2,29	E12.A2|E12.B2
2,65	**E12.0265.00 GU**	ABGY	X808		X408			2,79	E12.B2
3,15	**E12.0315.00 GU**	AE6N	X808		X408			3,29	E12.C3
4,15	**E12.0415.00 GU**	AGP6	X808		X408			4,29	E12.D4
5,15	**E12.0515.00 GU**	AC2Q	X808		X408			5,29	E12.D4

Order example: **E12.0130.00 GU X808** (X808 = Grade)

Grooving, Circlip Ring Grooves, with high positive rake angle

Circlip ring grooves comp. to DIN 471/472 and DIN 983/984.
With high positive rake angle, especially for light alloys.

Cutting parameters (start)	
f **0,04 mm/U**	Vc **Page 40**

Suitable toolholders on page
7, 8, 9, 10, 11, 12, 14, 15

SP HM LM Legend **37**

Scan **QR-Code** Or Visit **www.simtek.info/cp/501**

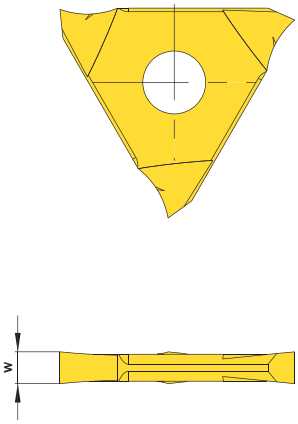

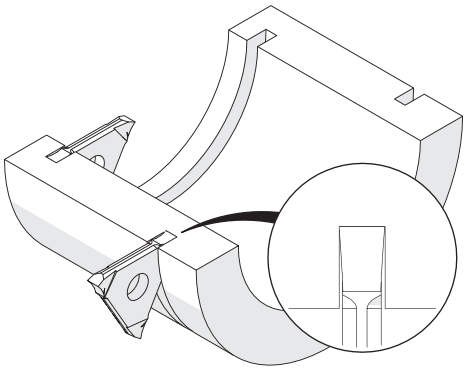

Drawing shows: E12.0265.40 C

Nominal width of groove mm	Part number	Webcode www.simtek.com/webcode	Our first choice	w -0,05 mm	Connectcode www.simtek.com/ccode
1,1	**E12.0110.40 C**	AGD1	H	1,24	E12.A1|E12.A2
1,3	**E12.0130.40 C**	AA6C	H	1,44	E12.A1|E12.A2
1,6	**E12.0160.40 C**	AGFW	H	1,74	E12.A1|E12.A2
1,85	**E12.0185.40 C**	ACVX	H	1,99	E12.A1|E12.A2
2,15	**E12.0215.40 C**	AENS	H	2,29	E12.A2|E12.B2
2,65	**E12.0265.40 C**	AFXA	H	2,79	E12.B2
3,15	**E12.0315.40 C**	AA3S	H	3,29	E12.C3
4,15	**E12.0415.40 C**	AK3D	H	4,29	E12.D4
5,15	**E12.0515.40 C**	AM1M	H	5,29	E12.D4

Order example: **E12.0160.40 C X808** (X808 = Grade)

Grooving, Circlip Ring Grooves with Chamfer

Circlip ring grooves comp. to DIN 471/472 and DIN 983/984, with chamfer.

Cutting parameters (start)	
f **0,04 mm/U**	Vc **Page 40**

Suitable toolholders on page
7, 8, 9, 10, 11, 12, 14

SP HM Legend **37**

Scan **QR-Code** Or Visit **www.simtek.info/cp/504**

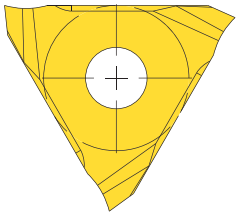

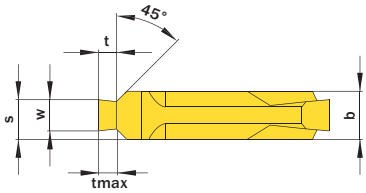

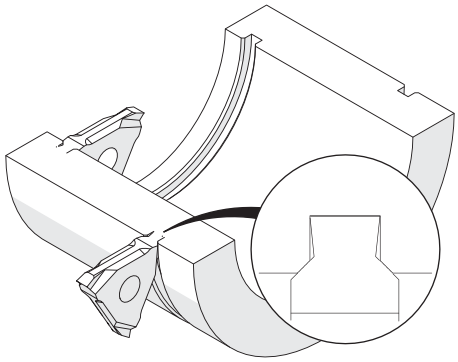

Nominal width of groove mm	tmax mm	b ±0,02 mm	Part number	Webcode www.simtek.com/webcode	Our first choice P K M N S	s mm	t mm	w -0,05 mm	Connectcode www.simtek.com/ccode
▼ **Nominal width of groove = 1,1 mm**									
1,1	0,25	2,5	**E12.1102.25 F**	ACC7	X800 X600	1,88	0,24	1,24	E12.A2|E12.B2
1,1	0,3	2,5	**E12.1103.25 F**	AC0T	X800 X600	1,88	0,29	1,24	E12.A2|E12.B2
1,1	0,35	2,5	**E12.1104.25 F**	AE1Y	X800 X600	1,88	0,33	1,24	E12.A2|E12.B2
1,1	0,4	2,5	**E12.1105.25 F**	AJ1V	X800 X600	1,88	0,36	1,24	E12.A2|E12.B2
▼ **Nominal width of groove = 1,3 mm**									
1,3	0,55	2,5	**E12.1306.25 F**	ACN1	X800 X600	1,98	0,45	1,44	E12.A2|E12.B2
▼ **Nominal width of groove = 1,6 mm**									
1,6	0,7	3,3	**E12.1607.33 F**	AJY0	X800 X600	2,53	0,6	1,74	E12.C3
1,6	0,85	3,3	**E12.1608.33 F**	AF23	X800 X600	2,53	0,75	1,74	E12.C3
1,6	1,0	3,3	**E12.1609.33 F**	AM03	X800 X600	2,53	0,85	1,74	E12.C3
▼ **Nominal width of groove = 1,85 mm**									
1,85	1,0	3,3	**E12.1810.33 F**	AD4J	X800 X600	2,66	0,85	1,99	E12.C3
1,85	1,25	3,3	**E12.1812.33 F**	APZ1	X800 X600	2,66	1,1	1,99	E12.C3
▼ **Nominal width of groove = 2,15 mm**									
2,15	1,5	4,3	**E12.2115.43 F**	AK5Q	X800 X600	3,31	1,35	2,29	E12.D4

Related Items can be found on the following page as well! Continued Table ▶

Order example: **E12.1812.33 F X800** (X800 = Grade)

Grooving, Circlip Ring Grooves with Chamfer

Circlip ring grooves comp. to DIN 471/472 and DIN 983/984, with chamfer.

Cutting parameters (start)	
f **0,04 mm/U**	Vc **Page 40**

Suitable toolholders on page
7, 8, 9, 10, 11, 12, 14

SP HM Legend **37**

Scan **QR-Code** Or Visit **www.simtek.info/cp/514**

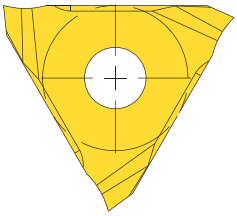

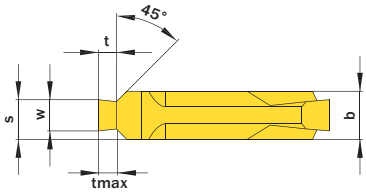

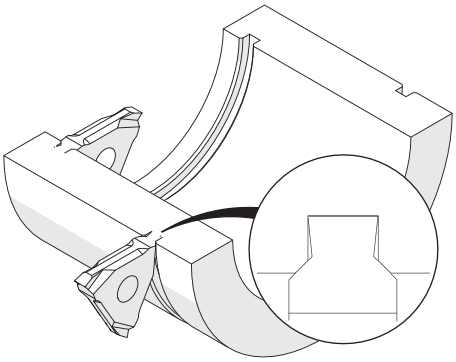

Nominal width of groove mm	tmax mm	b ±0,02 mm	Part number	Webcode www.simtek.com/webcode	Our first choice P K M N S	s mm	t mm	w -0,05 mm	Connectcode www.simtek.com/ccode
▼ Nominal width of groove = 2,65 mm									
2,65	1,5	3,3	**E12.2516.33 F**	AGJG	X800 X600	3,06	1,35	2,79	E12.C3
2,65	1,5	4,3	**E12.2616.43 F**	ABGF	X800 X600	3,56	1,35	2,79	E12.D4
2,65	1,75	4,3	**E12.2617.43 F**	AKMC	X800 X600	3,56	1,6	2,79	E12.D4
▼ Nominal width of groove = 3,15 mm									
3,15	1,75	5,3	**E12.3118.53 F**	AKWW	X800 X600	4,31	1,6	3,29	E12.D4
▼ Nominal width of groove = 4,15 mm									
4,15	2,0	5,3	**E12.4120.53 F**	AFQG	X800 X600	4,81	1,85	4,29	E12.D4
4,15	2,5	5,3	**E12.4125.53 F**	APSU	X800 X600	4,81	2,35	4,29	E12.D4
▼ Nominal width of groove = 5,15 mm									
5,15	3,0	6,3	**E12.5130.63 F**	AK6G	X800 X600	5,81	2,85	5,29	E12.D4

Continued Table **Related Items can be found on the previous page as well!**

Order example: **E12.4125.53 F X800** (X800 = Grade)

Grooving and Profiling

CNC profiling.

Cutting parameters (start)	
f **0,04 mm/U**	Vc **Page 40**

Suitable toolholders on page
7, 8, 9, 10, 11, 12, 14, 15

SP CBN | SP HM | Legend **37**

Scan **QR-Code** | Or Visit **www.simtek.info/cp/506**

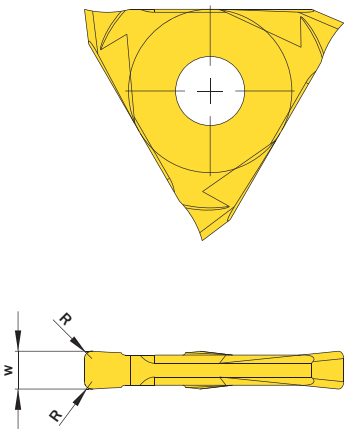

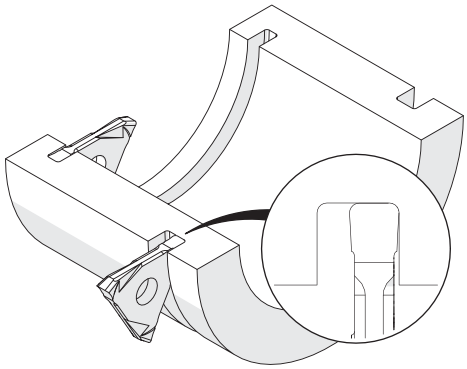

Drawing shows: E12.0300.06 N

w +0,03 mm	R mm	Part number	Webcode www.simtek.com/webcode	Our first choice P K M N S	Connectcode www.simtek.com/ccode
▼ w = 1,0 mm					
1,0	0,05	**E12.0100.00 N**	AMFH	X800 X600	E12.A1|E12.A2
1,0	0,2	**E12.0100.02 N**	AP31	X800 X600	E12.A1|E12.A2
▼ w = 1,5 mm					
1,5	0,05	**E12.0150.00 N**	AKVM	X800 X600	E12.A1|E12.A2
1,5	0,2	**E12.0150.02 N**	AEWQ	X800 X600	E12.A1|E12.A2
▼ w = 2,0 mm					
2,0	0,05	**E12.0200.00 N**	AEVK	X800 X600	E12.A1|E12.A2
2,0	0,2	**E12.0200.02 N**	AB41	X800 X600	E12.A1|E12.A2
2,0	0,4	**E12.0200.04 N**	AFS9	X800 X600	E12.A1|E12.A2
▼ w = 2,5 mm					
2,5	0,05	**E12.0250.00 N**	AG51	X800 X600	E12.A2|E12.B2
2,5	0,2	**E12.0250.02 N**	AGZ8	X800 X600	E12.A2|E12.B2
2,5	0,4	**E12.0250.04 N**	AECQ	X800 X600	E12.A2|E12.B2

Related Items can be found on the following page as well! Continued Table ▶

Order example: **E12.0100.00 N X800** (X800 = Grade)

simtek individual | E12. w, 1/100 mm, 4 Digits . R, 1/100 mm , 3 Digits Tolerance

Example Part number: **E12.0156.015 XN**

Grooving and Profiling

CNC profiling.

Cutting parameters (start)	
f **0,04 mm/U**	Vc **Page 40**

Suitable toolholders on page
7, 8, 9, 10, 11, 12, 14

SP HM Legend **37**

Scan **QR-Code** Or Visit **www.simtek.info/cp/865**

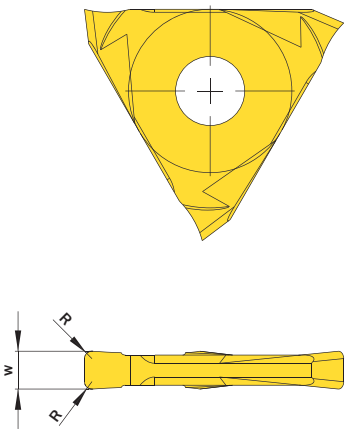

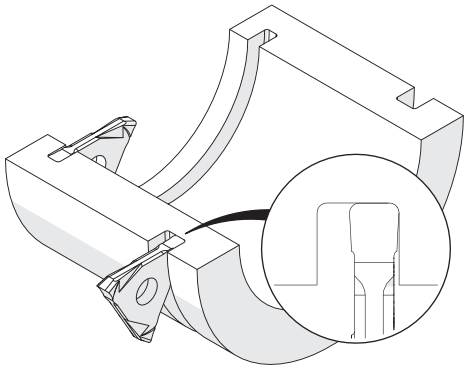

Drawing shows: E12.0300.06 N

w +0,03 mm	R mm	Part number	Webcode www.simtek.com/webcode	Our first choice P K M N S		Connectcode www.simtek.com/ccode
◀ Continued Table	Related Items can be found on the previous page as well!					
▼ w = 3,0 mm						
3,0	0,05	**E12.0300.00 N**	AGUD	X800	X600	E12.B2
3,0	0,2	**E12.0300.02 N**	ABEQ	X800	X600	E12.B2
3,0	0,4	**E12.0300.04 N**	AA6U	X800	X600	E12.B2
3,0	0,6	**E12.0300.06 N**	AMZM	X800	X600	E12.B2
3,0	0,8	**E12.0300.08 N**	AJV3	X800	X600	E12.B2
▼ w = 4,0 mm						
4,0	0,05	**E12.0400.00 N**	AP2K	X800	X600	E12.C3
4,0	0,2	**E12.0400.02 N**	ADXM	X800	X600	E12.C3
4,0	0,4	**E12.0400.04 N**	AFJK	X800	X600	E12.C3
4,0	0,8	**E12.0400.08 N**	AJP0	X800	X600	E12.C3
4,0	1,2	**E12.0400.12 N**	AKU8	X800	X600	E12.C3

Order example: **E12.0300.06 N X800** (X800 = Grade)

simtek individual | E12. w, 1/100 mm, 4 Digits . R, 1/100 mm , 3 Digits Tolerance

Example Part number: **E12.0156.015 XN**

Grooving and Turning, Two ground chip form channels

Grooving and turning, external. With two ground chip form channels.

Cutting parameters (start)	
f **0,08 mm/U**	Vc **Page 40**

Suitable toolholders on page
7, 8, 9, 10, 11, 12, 14

SP HM Legend **37**

Scan **QR-Code** Or Visit **www.simtek.info/cp/505**

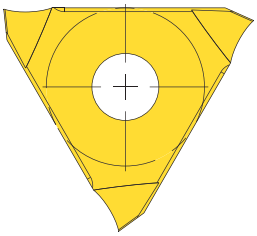

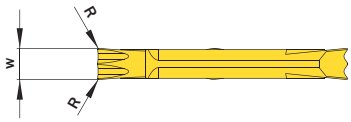

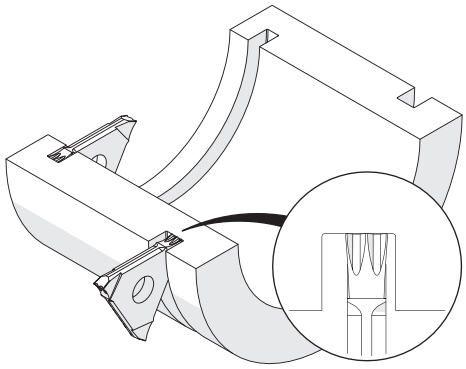

Drawing shows: E12.0025.44 W

w -0,05 mm	Part number	Webcode www.simtek.com/webcode	Our first choice P K M N S	R mm	Connectcode www.simtek.com/ccode
2,5	**E12.0025.44 W**	AHYP	X800 X600	0,2	E12.A2 | E12.B2

Order example: **E12.0025.44 W X800** (X800 = Grade)

Grooving and Profiling, Full Radius

Full radius, CNC profiling.

Cutting parameters (start)	
f **0,04 mm/U**	Vc **Page 40**

Suitable toolholders on page
7, 8, 9, 10, 11, 12, 14, 15

SP HM Legend **37**

Scan **QR-Code** Or Visit **www.simtek.info/cp/507**

This page contains inch tools! These tools are indicated by **inch** on the right hand side.

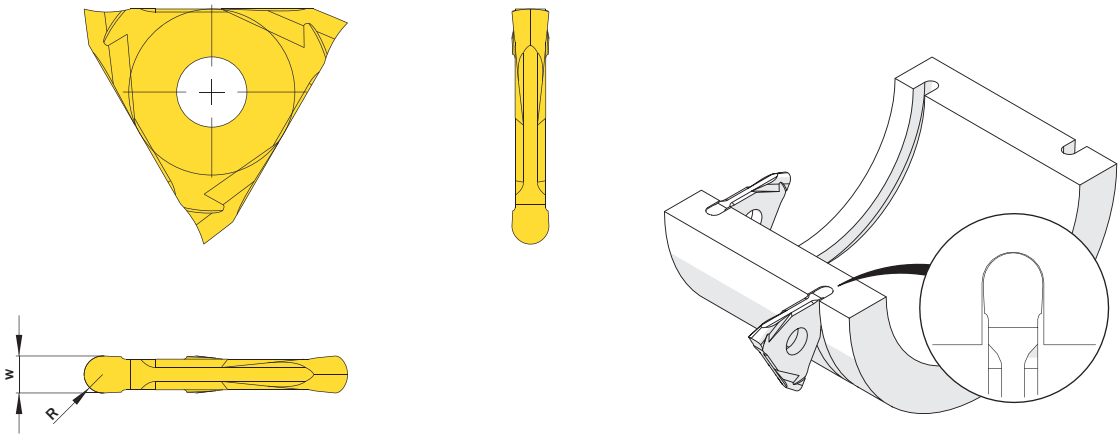

Drawing shows: E12.0300.15 V

w +0,04 mm/inch	R mm/inch	Part number	Webcode www.simtek.com/webcode	Our first choice P K M N S	Connectcode www.simtek.com/ccode	
1,0	0,5	**E12.0100.05 V**	ADKV	X800 X600	E12.A1|E12.A2	
1,2	0,6	**E12.0120.06 V**	AKTC	X800 X600	E12.A1|E12.A2	
1,5	0,75	**E12.0150.07 V**	AMYT	X800 X600	E12.A1|E12.A2	
2,0	1,0	**E12.0200.10 V**	AFZA	X800 X600	E12.A1|E12.A2	
0.094“	0.047“	**E12.0238.12 V**	A1PG	X800 X600	E12.A1|E12.A2	inch
2,5	1,25	**E12.0250.12 V**	AH44	X800 X600	E12.A2|E12.B2	
3,0	1,5	**E12.0300.15 V**	AAW2	X800 X600	E12.B2	
4,0	2,0	**E12.0400.20 V**	AFGY	X800 X600	E12.C3	

Order example: **E12.0150.07 V X800** (X800 = Grade)

Corner Relief, Full Radius

Corner relief, full radius with increased lateral relief angles.

Cutting parameters (start)	
f **0,04 mm/U**	Vc **Page 40**

Suitable toolholders on page
7, 8, 9, 10, 11, 12, 14, 15

SP HM Legend **37**

Scan **QR-Code** Or Visit **www.simtek.info/cp/508**

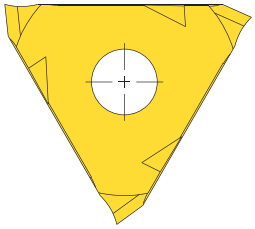

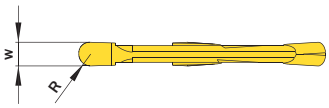

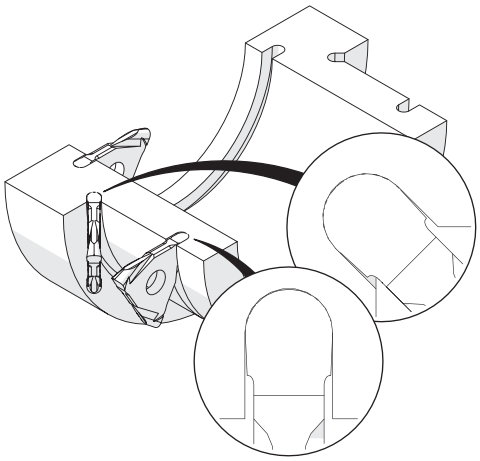

Drawing shows: E12.0010.20 V

R mm	w ±0,03 mm	Part number	Webcode www.simtek.com/webcode	Our first choice P K M N S	Connectcode www.simtek.com/ccode
1,0	2,0	**E12.0010.20 V**	AGXF	X800 X600	E12.A1 | E12.A2
1,2	2,4	**E12.0012.24 V**	AM15	X800 X600	E12.A2 | E12.B2
1,5	3,0	**E12.0015.30 V**	APVW	X800 X600	E12.B2
2,0	4,0	**E12.0020.40 V**	ANJ2	X800 X600	E12.C3
2,5	5,0	**E12.0025.50 V**	AHJ2	X800 X600	E12.D4
3,0	6,0	**E12.0030.60 V**	AJ0T	X800 X600	E12.D4

Order example: **E12.0012.24 V X800** (X800 = Grade)

Grooving, Round-Wire Snap-Ring

Round-wire snap-ring, comparing to DIN 7993.

Cutting parameters (start)	
f **0,04 mm/U**	Vc **Page 40**

Suitable toolholders on page
7, 8, 9, 10, 11, 12, 14, 15

SP HM Legend **37**

Scan **QR-Code** Or Visit **www.simtek.info/cp/497**

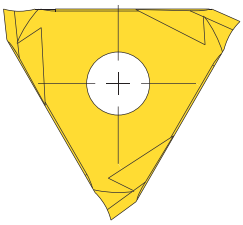

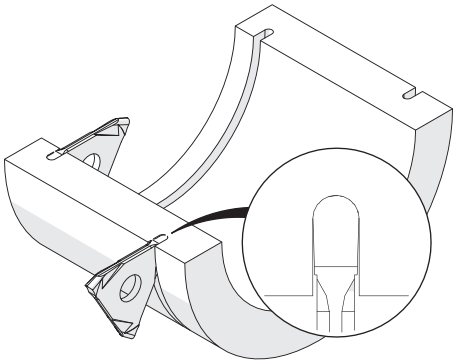

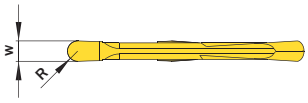

Drawing shows: E12.0009.00 V

R mm	Part number	Webcode www.simtek.com/webcode	Our first choice P K M N S	w ±0,03 mm	Connectcode www.simtek.com/ccode
0,8	**E12.0008.00 V**	AAUG	X800 X600	1,6	E12.A1 | E12.A2
0,9	**E12.0009.00 V**	AGCW	X800 X600	1,8	E12.A1 | E12.A2
1,1	**E12.0011.00 V**	AM8P	X800 X600	2,2	E12.A2 | E12.B2
1,4	**E12.0014.00 V**	AG9V	X800 X600	2,8	E12.B2
1,8	**E12.0018.00 V**	ABHS	X800 X600	3,6	E12.C3

Order example: **E12.0008.00 V X800** (X800 = Grade)

Grooving, Slim Round-Wire Snap-Ring

Round-wire snap-ring, comparing to DIN 7993.

Cutting parameters (start)	
f **0,04 mm/U**	Vc **Page 40**

Suitable toolholders on page
7, 8, 9, 10, 11, 12, 14, 15

SP HM Legend **37**

Scan **QR-Code** Or Visit **www.simtek.info/cp/496**

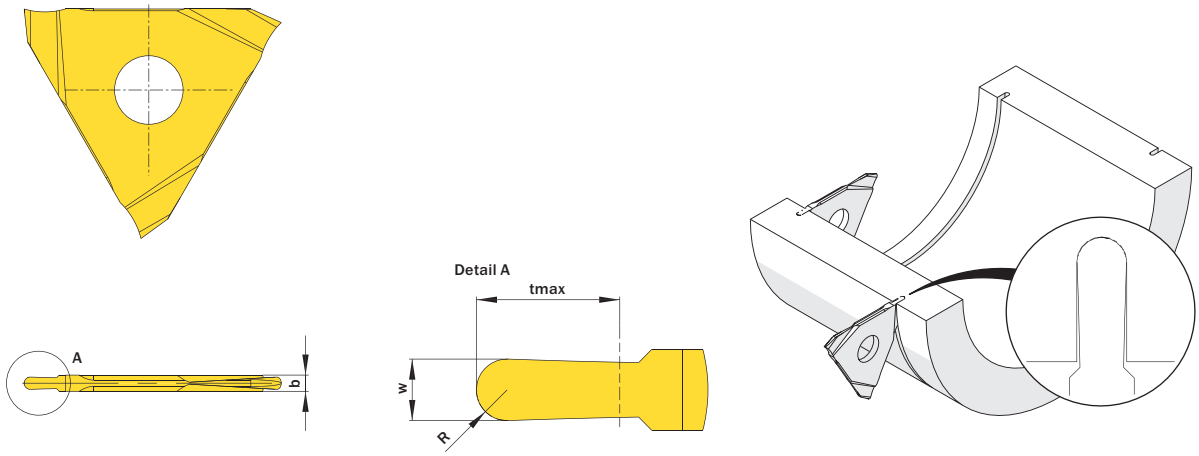

Drawing shows: E12.1305.00 V

b ±0,02 mm	R mm	Part number	Webcode www.simtek.com/webcode	Our first choice P	K	M	N	S	tmax mm	w ±0,03 mm	Connectcode www.simtek.com/ccode
1,3	0,2	**E12.1302.00 V**	AMYV	X800			X600		0,6	0,4	E12.A1 | E12.A2
1,3	0,25	**E12.1302.05 V**	A2WD	X800			X600		0,85	0,5	E12.A1 | E12.A2
1,3	0,3	**E12.1303.00 V**	AC92	X800			X600		1,1	0,6	E12.A1 | E12.A2
1,3	0,4	**E12.1304.00 V**	AA2Q	X800			X600		1,8	0,8	E12.A1 | E12.A2
1,3	0,5	**E12.1305.00 V**	AMD3	X800			X600		2,3	1,0	E12.A1 | E12.A2
1,3	0,6	**E12.1306.00 V**	AN0T	X800			X600		2,5	1,2	E12.A1 | E12.A2

Order example: **E12.1305.00 V X800** (X800 = Grade)

Thread Reliefs

Thread reliefs, comp. to DIN 76 profil B.

Cutting parameters (start)	
f **0,04 mm/U**	Vc **Page 40**

Suitable toolholders on page
7, 8, 9, 10, 11, 12, 14, 15

SP HM R Legend **37**

Scan **QR-Code** Or Visit **www.simtek.info/cp/873**

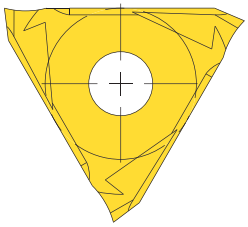

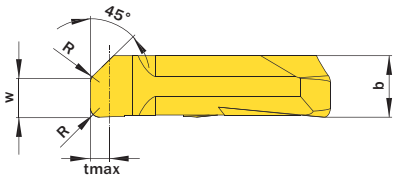

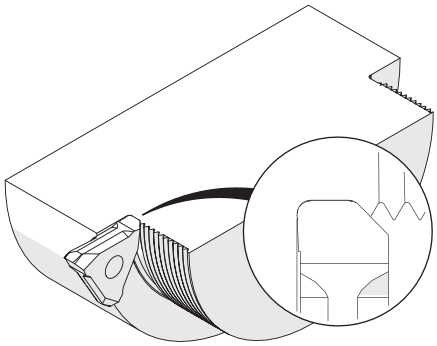

Drawing shows: E12.3150.53 E R

Pitch (as of) mm	b mm	Part number	Webcode www.simtek.com/webcode	Our first choice P K M N S	R mm	tmax mm	w mm	Connectcode www.simtek.com/ccode
▼ Pitch (as of) = 0,5 mm								
0,5	1,7	**E12.1050.17 E R/L**	R AKSN L AF3B	X800 X600	0,2	0,4	0,6	E12.A1|E12.A2
▼ Pitch (as of) = 0,8 mm								
0,8	2,7	**E12.1080.27 E R/L**	R AATG L ADUS	X800 X600	0,4	0,65	0,95	E12.B2
▼ Pitch (as of) = 1,0 mm								
1,0	2,7	**E12.1100.27 E R/L**	R AG81 L ANYY	X800 X600	0,6	0,8	1,2	E12.B2
▼ Pitch (as of) = 1,25 mm								
1,25	2,7	**E12.1125.27 E R/L**	R AAJH L AG1Y	X800 X600	0,6	1,0	1,5	E12.B2
▼ Pitch (as of) = 1,5 mm								
1,5	3,7	**E12.1150.37 E R/L**	R AGCV L AK0V	X800 X600	0,8	1,15	1,85	E12.C3
▼ Pitch (as of) = 1,75 mm								
1,75	3,7	**E12.1175.37 E R/L**	R AP4F L AEWN	X800 X600	1,0	1,3	2,2	E12.C3
▼ Pitch (as of) = 2,0 mm								
2,0	5,3	**E12.1200.53 E R/L**	R AJXB L AFHY	X800 X600	1,0	1,5	2,5	E12.D4
▼ Pitch (as of) = 2,5 mm								
2,5	5,3	**E12.1250.53 E R/L**	R AMPE L AMXK	X800 X600	1,2	1,8	3,2	E12.D4
▼ Pitch (as of) = 3,0 mm								
3,0	6,3	**E12.1300.63 E R/L**	R AH9W L AFPX	X800 X600	1,6	2,2	3,8	E12.D4

Related Items can be found on the following page as well! Continued Table

Order example: **E12.1080.27 E R X800** (R = Right hand version, X800 = Grade)

Thread Reliefs

Thread reliefs, comp. to DIN 76 profil A.

Cutting parameters (start)	
f **0,04 mm/U**	Vc **Page 40**

Suitable toolholders on page
7, 8, 9, 10, 11, 12, 14, 15

SP HM R Legend **37**

Scan **QR-Code** Or Visit **www.simtek.info/cp/511**

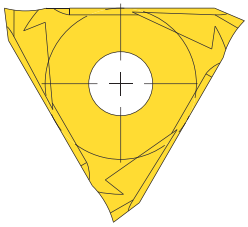

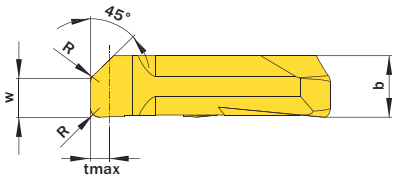

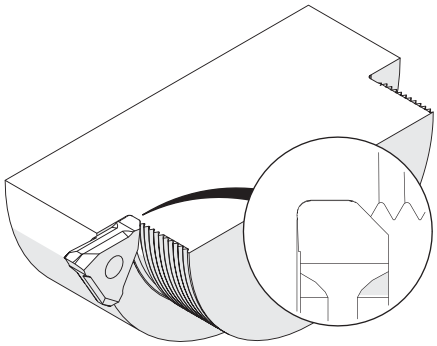

Drawing shows: E12.3150.53 E R

Pitch (as of) mm	b mm	Part number	Webcode www.simtek.com/webcode	Our first choice P K M N S	R mm	tmax mm	w ±0,05 mm	Connectcode www.simtek.com/ccode
◀ Continued Table		**Related Items can be found on the previous page as well!**						
▼ **Pitch (as of) = 0,5 mm**								
0,5	1,7	**E12.3050.17 E R/L**	R AFMU L AJY5	X800 X400	0,2	0,4	1,1	E12.A1 | E12.A2
▼ **Pitch (as of) = 0,6 mm**								
0,6	2,7	**E12.3060.27 E R/L**	R AMQH L AN7X	X800 X400	0,4	0,5	1,3	E12.B2
▼ **Pitch (as of) = 0,8 mm**								
0,8	2,7	**E12.3080.27 ER/L**	R AAJ4 L AHTJ	X800 X400	0,4	0,65	1,75	E12.B2
▼ **Pitch (as of) = 1,0 mm**								
1,0	3,7	**E12.3100.37 E R/L**	R AHYA L AFHT	X800 X400	0,6	0,8	2,2	E12.C3
▼ **Pitch (as of) = 1,25 mm**								
1,25	5,3	**E12.3125.53 E R/L**	R AB82 L ANGJ	X800 X400	0,6	1,0	2,8	E12.D4
▼ **Pitch (as of) = 1,5 mm**								
1,5	5,3	**E12.3150.53 E R/L**	R AK1C L AMXF	X800 X400	0,8	1,15	3,35	E12.D4

Order example: **E12.3125.53 E R X800** (R = Right hand version, X800 = Grade)

Parting Off

Available in different angles, widths and with/without ground chip form channel.

Cutting parameters (start)	
f **0,08 mm/U**	Vc **Page 40**

Suitable toolholders on page
7, 8, 9, 10, 11, 12, 13, 14, 15

SP HM R Legend **37**

Scan **QR-Code** Or Visit **www.simtek.info/cp/513**

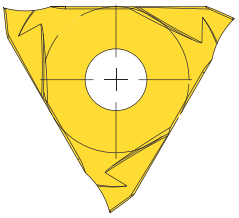

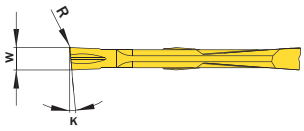

Drawing shows: E12.1520.11 P R

Similar illustrations

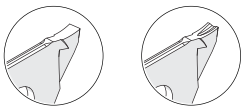

E12...00 P R
E12...PS R

E12...11 P R
E12...PT R

! Machineable materials. See below.

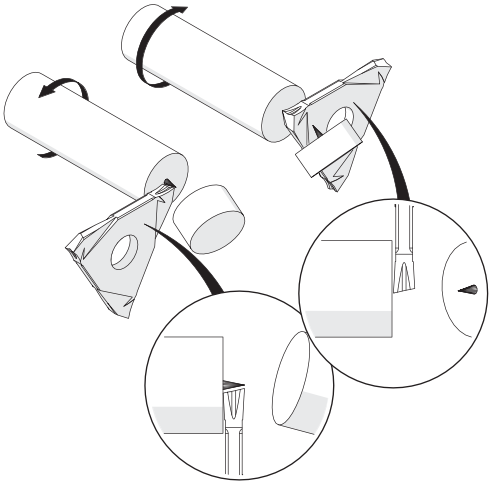

K	w -0,05 mm	Part number	Webcode www.simtek.com/webcode	Our first choice P K M N S	With chip form channel	R mm	Connectcode www.simtek.com/ccode
▼ w = 1,0 mm							
12°	1,0	**E12.1210.00 P R/L**	R AFQD L AB4M	X800 X600	No	0,1	E12.A1|E12.A2
12°	1,0	**E12.1210.11 P R/L**	R ANDX L AMEB	X800 X600	Yes	0,1	E12.A1|E12.A2
▼ w = 1,3 mm							
6°-7°	1,3	**E12.0613.00 P R/L**	R AD3K L AHKK	X800 X600	No	0,1	E12.A1|E12.A2
6°-7°	1,3	**E12.0613.11 P R/L**	R ABPV L AEZZ	X800 X600	Yes	0,1	E12.A1|E12.A2
▼ w = 1,6 mm							
6°-7°	1,6	**E12.0516.00 P R/L**	R ACV8 L AF73	X800 X600	No	0,1	E12.A1|E12.A2
6°-7°	1,6	**E12.0516.11 P R/L**	R AMGM L ACKA	X800 X600	Yes	0,1	E12.A1|E12.A2
6°-7°	1,6	**E12.0516.68 PS R/L**	R AWEK L AWEN	X800 X600	No	0,1	E68.A1
6°-7°	1,6	**E12.0516.68 PT R/L**	R AWEQ L AWEP	X800 X600	Yes	0,1	E68.A1
▼ w = 2,0 mm							
5°-6°	2,0	**E12.0520.00 P R/L**	R AC2J L ACEX	X800 X600	No	0,1	E12.A1|E12.A2
5°-6°	2,0	**E12.0520.11 P R/L**	R ANDM L AJEN	X800 X600	Yes	0,1	E12.A1|E12.A2
15°	2,0	**E12.1520.11 P R/L**	R AFED L APJT	X800 X600	Yes	0,1	E12.A1|E12.A2
▼ w = 2,1 mm							
5°-6°	2,1	**E12.0521.11 P R/L**	R AN1B L AHHT	X800 X600	Yes	0,1	E12.A2|E12.B2

Order example: **E12.0516.68 PS R X800** (R = Right hand version, X800 = Grade)

For a wide variety of work piece materials as well as especially for long-chipping materials and high cutting depths.

Face Grooving

For face grooves in different widths.

Cutting parameters (start)	
f **0,04 mm/U**	Vc **Page 40**

Suitable toolholders on page
7, 8, 9, 10, 11, 12, 14

SP HM R Legend **37**

Scan **QR-Code** Or Visit **www.simtek.info/cp/509**

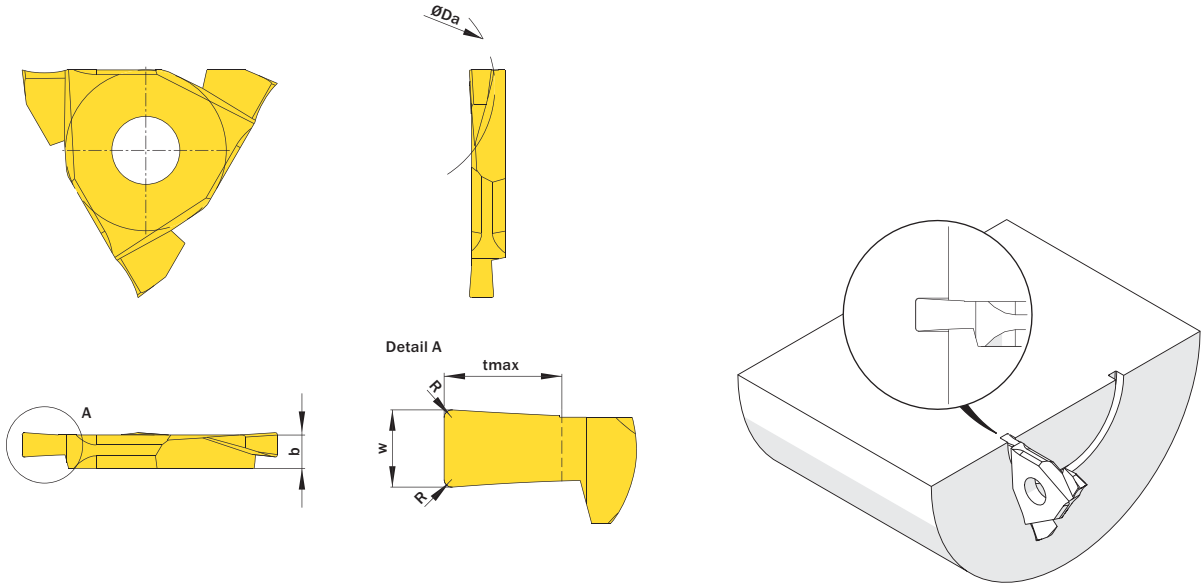

Drawing shows: E12.3020.02 A R

w ±0,02 mm	Part number	Webcode www.simtek.com/webcode	Our first choice P K M N S	b mm	ØDa mm	R mm	tmax mm	Connectcode www.simtek.com/ccode
1,5	**E12.2015.02 A R/L**	R AM85 L AMEV	X800 X600	2,7	30,0	0,2	2,0	E12.B2
2,0	**E12.3020.02 A R/L**	R ADEQ L APQJ	X800 X600	2,7	30,0	0,2	3,0	E12.B2
3,0	**E12.3030.02 A R/L**	R ADK0 L AK9X	X800 X600	3,7	30,0	0,2	3,0	E12.C3

Order example: **E12.3020.02 A R X800** (R = Right hand version, X800 = Grade)

Poly-V-Belt Grooves

For Poly-V-profiles J and K.

Cutting parameters (start)	
f **0,04 mm/U**	Vc **Page 40**

Suitable toolholders on page
7, 8, 9, 10, 11, 12, 14

SP HM Legend **37**

Scan **QR-Code** Or Visit **www.simtek.info/cp/512**

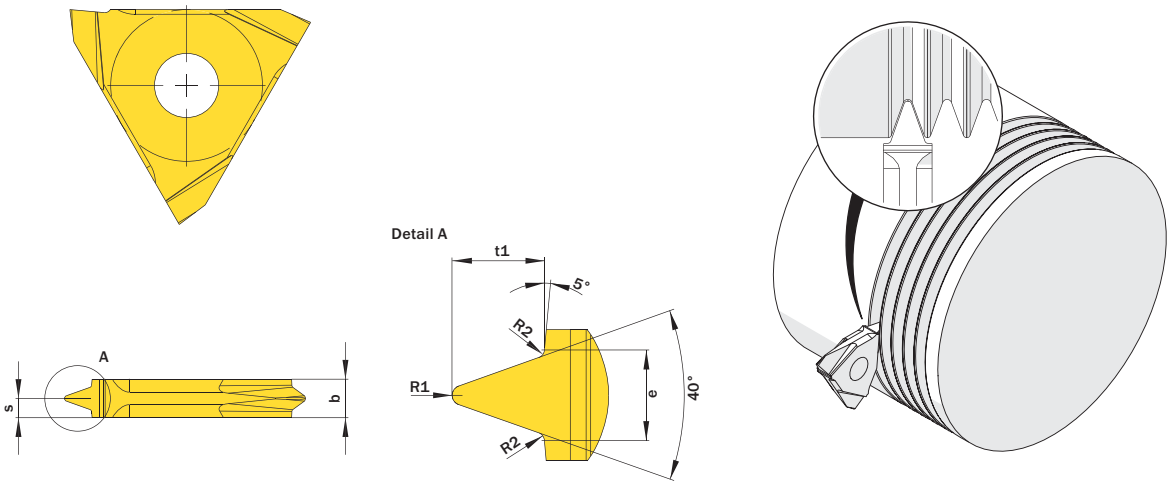

Drawing shows: E12.0223.30 J

e mm	R1 mm	R2 mm	b ±0,02 mm	Part number	Webcode www.simtek.com/webcode	Our first choice P K M N S	Profile	S mm	t1 mm	Connectcode www.simtek.com/ccode
2,34	0,25	0,2	3,3	**E12.0223.30 J**	ADQ4	X800 X400	J	1,65	2,3	E12.C3
3,56	0,35	0,25	4,3	**E12.0356.43 J**	AFAV	X800 X400	K	2,15	3,69	E12.D4

Order example: **E12.0356.43 J X800** (X800 = Grade)

Info

Legend

SP CBN **CBN insert**

SP HM **Carbide insert**

TW ST **Steel toolholder**

R **Right hand version shown, left hand version inversely**

LM **For light-alloys**

Tools for highest expectations
SIMTEK

Index

simturn E12 Product list

Part Nr.	P
E09.2020.02 L	12
E09.2020.02 R	12
E09.2020.03 L	12
E09.2020.03 R	12
E09.2020.04 L	12
E09.2020.04 R	12
E09.2525.02 L	12
E09.2525.02 R	12
E09.2525.03 L	12
E09.2525.03 R	12
E09.2525.04 L	12
E09.2525.04 R	12
E09.3232.02 L	12
E09.3232.02 R	12
E09.3232.03 L	12
E09.3232.03 R	12
E09.3232.04 L	12
E09.3232.04 R	12
E12.0008.00 V	30
E12.0009.00 V	30
E12.0010.20 V	29
E12.0011.00 V	30
E12.0012.24 V	29
E12.0014.00 V	30
E12.0015.30 V	29
E12.0018.00 V	30
E12.0020.40 V	29
E12.0025.44 W	27
E12.0025.50 V	29
E12.0030.60 V	29
E12.0050.00 H	17
E12.0060.00 H	17
E12.0070.00 H	17
E12.0080.00 H	17
E12.0090.00 H	17
E12.0100.00 H	17
E12.0100.00 N	25
E12.0100.02 N	25
E12.0100.05 V	28
E12.0110.00 G	18
E12.0110.00 GU	21
E12.0110.11 K	20
E12.0110.40 C	22
E12.0117.00 G	19
E12.0120.06 V	28
E12.0130.00 G	18
E12.0130.00 GU	21
E12.0130.11 K	20
E12.0130.40 C	22
E12.0142.00 G	19
E12.0150.00 N	25
E12.0150.02 N	25
E12.0150.07 V	28
E12.0157.00 G	19
E12.0160.00 G	18
E12.0160.00 GU	21
E12.0160.11 K	20
E12.0160.40 C	22
E12.0185.00 G	18
E12.0185.00 GU	21
E12.0185.11 K	20
E12.0185.40 C	22
E12.0200.00 N	25
E12.0200.02 N	25
E12.0200.04 N	25
E12.0200.10 V	28

Part Nr.	P
E12.0215.00 G	18
E12.0215.00 GU	21
E12.0215.11 K	20
E12.0215.40 C	22
E12.0223.30 J	36
E12.0238.00 G	19
E12.0238.12 V	28
E12.0250.00 N	25
E12.0250.02 N	25
E12.0250.04 N	25
E12.0250.12 V	28
E12.0265.00 G	18
E12.0265.00 GU	21
E12.0265.11 K	20
E12.0265.40 C	22
E12.0300.00 N	26
E12.0300.02 N	26
E12.0300.04 N	26
E12.0300.06 N	26
E12.0300.08 N	26
E12.0300.15 V	28
E12.0315.00 G	18
E12.0315.00 GU	21
E12.0315.11 K	20
E12.0315.40 C	22
E12.0318.00 G	19
E12.0356.43 J	36
E12.0400.00 N	26
E12.0400.02 N	26
E12.0400.04 N	26
E12.0400.08 N	26
E12.0400.12 N	26
E12.0400.20 V	28
E12.0415.00 G	18
E12.0415.00 GU	21
E12.0415.40 C	22
E12.0515.00 G	18
E12.0515.00 GU	21
E12.0515.40 C	22
E12.0516.00 P L	34
E12.0516.00 P R	34
E12.0516.11 P L	34
E12.0516.11 P R	34
E12.0516.68 PS L	34
E12.0516.68 PS R	34
E12.0516.68 PT L	34
E12.0516.68 PT R	34
E12.0520.00 P L	34
E12.0520.00 P R	34
E12.0520.11 P L	34
E12.0520.11 P R	34
E12.0521.11 P L	34
E12.0521.11 P R	34
E12.0613.00 P L	34
E12.0613.00 P R	34
E12.0613.11 P L	34
E12.0613.11 P R	34
E12.1034.00 Z	16
E12.1044.00 Z	16
E12.1050.00 Z	16
E12.1050.17 E L	32
E12.1050.17 E R	32
E12.1054.00 Z	16
E12.1060.00 Z	16
E12.1064.00 Z	16
E12.1070.00 Z	16

Part Nr.	P
E12.1074.00 Z	16
E12.1080.00 Z	16
E12.1080.27 E L	32
E12.1080.27 E R	32
E12.1085.00 Z	16
E12.1090.00 Z	16
E12.1094.00 Z	16
E12.1100.00 Z	16
E12.1100.27 E L	32
E12.1100.27 E R	32
E12.1102.25 F	23
E12.1103.25 F	23
E12.1104.25 F	23
E12.1105.00 Z	16
E12.1105.25 F	23
E12.1115.00 Z	16
E12.1125.27 E L	32
E12.1125.27 E R	32
E12.1150.37 E L	32
E12.1150.37 E R	32
E12.1175.37 E L	32
E12.1175.37 E R	32
E12.1200.53 E L	32
E12.1200.53 E R	32
E12.1210.00 P L	34
E12.1210.00 P R	34
E12.1210.11 P L	34
E12.1210.11 P R	34
E12.1250.53 E L	32
E12.1250.53 E R	32
E12.1300.63 E L	32
E12.1300.63 E R	32
E12.1302.00 V	31
E12.1302.05 V	31
E12.1303.00 V	31
E12.1304.00 V	31
E12.1305.00 V	31
E12.1306.00 V	31
E12.1306.25 F	23
E12.1520.11 P L	34
E12.1520.11 P R	34
E12.1607.33 F	23
E12.1608.33 F	23
E12.1609.33 F	23
E12.1810.33 F	23
E12.1812.33 F	23
E12.2015.02 A L	35
E12.2015.02 A R	35
E12.2115.43 F	23
E12.2516.33 F	24
E12.2616.43 F	24
E12.2617.43 F	24
E12.3020.02 A L	35
E12.3020.02 A R	35
E12.3030.02 A L	35
E12.3030.02 A R	35
E12.3050.17 E L	33
E12.3050.17 E R	33
E12.3060.27 E L	33
E12.3060.27 E R	33
E12.3080.27 EL	33
E12.3080.27 ER	33
E12.3100.37 E L	33
E12.3100.37 E R	33
E12.3118.53 F	24
E12.3125.53 E L	33

Part Nr.	P
E12.3125.53 E R	33
E12.3150.53 E L	33
E12.3150.53 E R	33
E12.4120.53 F	24
E12.4125.53 F	24
E12.5130.63 F	24
E30.0025.01 L	11
E30.0025.01 R	11
E30.0025.02 L	11
E30.0025.02 R	11
E30.0025.03 L	11
E30.0025.03 R	11
E30.0025.04 L	11
E30.0025.04 R	11
E30.0032.01 L	11
E30.0032.01 R	11
E30.0032.02 L	11
E30.0032.02 R	11
E30.0032.03 L	11
E30.0032.03 R	11
E30.0032.04 L	11
E30.0032.04 R	11
E30.0040.01 L	11
E30.0040.01 R	11
E30.0040.02 L	11
E30.0040.02 R	11
E30.0040.03 L	11
E30.0040.03 R	11
E30.0040.04 L	11
E30.0040.04 R	11
E60.1212.01 L	7
E60.1212.01 R	7
E60.1212.02 L	7
E60.1212.02 R	7
E60.1212.03 L	7
E60.1212.03 R	7
E60.1212.23 L	7
E60.1212.23 R	7
E60.1616.01 L	7
E60.1616.01 R	7
E60.1616.02 L	7
E60.1616.02 R	7
E60.1616.03 L	7
E60.1616.03 R	7
E60.1616.04 L	7
E60.1616.04 R	7
E60.1616.23 L	7
E60.1616.23 R	7
E60.2020.01 L	7
E60.2020.01 R	7
E60.2020.02 L	7
E60.2020.02 R	7
E60.2020.03 L	7
E60.2020.03 R	7
E60.2020.04 L	7
E60.2020.04 R	7
E60.2020.23 L	7
E60.2020.23 R	7
E60.2525.01 L	8
E60.2525.01 R	8
E60.2525.02 L	8
E60.2525.02 R	8
E60.2525.03 L	8
E60.2525.03 R	8
E60.2525.04 L	8
E60.2525.04 R	8

Part Nr.	P
E60.2525.23 L	8
E60.2525.23 R	8
E60.3232.01 L	8
E60.3232.01 R	8
E60.3232.02 L	8
E60.3232.02 R	8
E60.3232.03 L	8
E60.3232.03 R	8
E60.3232.04 L	8
E60.3232.04 R	8
E68.1212.08 L	13
E68.1212.08 R	13
E68.1212.11 L	13
E68.1212.11 R	13
E68.1616.11 L	13
E68.1616.11 R	13
E69.2020.01 L	10
E69.2020.01 R	10
E69.2020.02 L	10
E69.2020.02 R	10
E69.2020.03 L	10
E69.2020.03 R	10
E69.2020.04 L	10
E69.2020.04 R	10
E69.2525.01 L	10
E69.2525.01 R	10
E69.2525.02 L	10
E69.2525.02 R	10
E69.2525.03 L	10
E69.2525.03 R	10
E69.2525.04 L	10
E69.2525.04 R	10
E90.1212.01 L	9
E90.1212.01 R	9
E90.1616.01 L	9
E90.1616.01 R	9
E90.1616.02 L	9
E90.1616.02 R	9
E90.2020.01 L	9
E90.2020.01 R	9
E90.2020.02 L	9
E90.2020.02 R	9
E90.2020.03 L	9
E90.2020.03 R	9
E90.2020.04 L	9
E90.2020.04 R	9
E90.2525.01 L	9
E90.2525.01 R	9
E90.2525.02 L	9
E90.2525.02 R	9
E90.2525.03 L	9
E90.2525.03 R	9
E90.2525.04 L	9
E90.2525.04 R	9
E90.3232.01 L	9
E90.3232.01 R	9
E90.3232.02 L	9
E90.3232.02 R	9
E90.3232.03 L	9
E90.3232.03 R	9
E90.3232.04 L	9
E90.3232.04 R	9
TOA.E60.19.01 L	14
TOA.E60.19.01 R	14
TOA.E60.19.02 L	14
TOA.E60.19.02 R	14

Tools for highest expectations
SIMTEK

Index

simturn E12 Product list

Part Nr.	P
T0A.E60.19.03 R	14
T0A.E60.19.04 L	14
T0A.E60.19.04 R	14
T0A.E60.19.23 L	14
T0A.E60.19.23 R	14
T0A.E60.V1.01 L	8
T0A.E60.V1.01 R	8
T0A.E60.V1.02 L	8
T0A.E60.V1.02 R	8
T0A.E60.V1.03 L	8
T0A.E60.V1.03 R	8
T0A.E60.V1.23 L	8
T0A.E60.V1.23 R	8
T0G.K.E12.C1.01 R	15

Tools for highest expectations
SIMTEK

Info

Legend

SP CBN **CBN insert**

SP HM **Carbide insert**

TW ST **Steel toolholder**

R **Right hand version shown, left hand version inversely**

LM **For light-alloys**

Tools for highest expectations
SIMTEK

Index

simturn E12 Product list

Part Nr.	P
E09.2020.02 L	12
E09.2020.02 R	12
E09.2020.03 L	12
E09.2020.03 R	12
E09.2020.04 L	12
E09.2020.04 R	12
E09.2525.02 L	12
E09.2525.02 R	12
E09.2525.03 L	12
E09.2525.03 R	12
E09.2525.04 L	12
E09.2525.04 R	12
E09.3232.02 L	12
E09.3232.02 R	12
E09.3232.03 L	12
E09.3232.03 R	12
E09.3232.04 L	12
E09.3232.04 R	12
E12.0008.00 V	30
E12.0009.00 V	30
E12.0010.20 V	29
E12.0011.00 V	30
E12.0012.24 V	29
E12.0014.00 V	30
E12.0015.30 V	29
E12.0018.00 V	30
E12.0020.40 V	29
E12.0025.44 W	27
E12.0025.50 V	29
E12.0030.60 V	29
E12.0050.00 H	17
E12.0060.00 H	17
E12.0070.00 H	17
E12.0080.00 H	17
E12.0090.00 H	17
E12.0100.00 H	17
E12.0100.00 N	25
E12.0100.02 N	25
E12.0100.05 V	28
E12.0110.00 G	18
E12.0110.00 GU	21
E12.0110.11 K	20
E12.0110.40 C	22
E12.0117.00 G	19
E12.0120.06 V	28
E12.0130.00 G	18
E12.0130.00 GU	21
E12.0130.11 K	20
E12.0130.40 C	22
E12.0142.00 G	19
E12.0150.00 N	25
E12.0150.02 N	25
E12.0150.07 V	28
E12.0157.00 G	19
E12.0160.00 G	18
E12.0160.00 GU	21
E12.0160.11 K	20
E12.0160.40 C	22
E12.0185.00 G	18
E12.0185.00 GU	21
E12.0185.11 K	20
E12.0185.40 C	22
E12.0200.00 N	25
E12.0200.02 N	25
E12.0200.04 N	25
E12.0200.10 V	28

Part Nr.	P
E12.0215.00 G	18
E12.0215.00 GU	21
E12.0215.11 K	20
E12.0215.40 C	22
E12.0223.30 J	36
E12.0238.00 G	19
E12.0238.12 V	28
E12.0250.00 N	25
E12.0250.02 N	25
E12.0250.04 N	25
E12.0250.12 V	28
E12.0265.00 G	18
E12.0265.00 GU	21
E12.0265.11 K	20
E12.0265.40 C	22
E12.0300.00 N	26
E12.0300.02 N	26
E12.0300.04 N	26
E12.0300.06 N	26
E12.0300.08 N	26
E12.0300.15 V	28
E12.0315.00 G	18
E12.0315.00 GU	21
E12.0315.11 K	20
E12.0315.40 C	22
E12.0318.00 G	19
E12.0356.43 J	36
E12.0400.00 N	26
E12.0400.02 N	26
E12.0400.04 N	26
E12.0400.08 N	26
E12.0400.12 N	26
E12.0400.20 V	28
E12.0415.00 G	18
E12.0415.00 GU	21
E12.0415.40 C	22
E12.0515.00 G	18
E12.0515.00 GU	21
E12.0515.40 C	22
E12.0516.00 P L	34
E12.0516.00 P R	34
E12.0516.11 P L	34
E12.0516.11 P R	34
E12.0516.68 PS L	34
E12.0516.68 PS R	34
E12.0516.68 PT L	34
E12.0516.68 PT R	34
E12.0520.00 P L	34
E12.0520.00 P R	34
E12.0520.11 P L	34
E12.0520.11 P R	34
E12.0521.11 P L	34
E12.0521.11 P R	34
E12.0613.00 P L	34
E12.0613.00 P R	34
E12.0613.11 P L	34
E12.0613.11 P R	34
E12.1034.00 Z	16
E12.1044.00 Z	16
E12.1050.00 Z	16
E12.1050.17 E L	32
E12.1050.17 E R	32
E12.1054.00 Z	16
E12.1060.00 Z	16
E12.1064.00 Z	16
E12.1070.00 Z	16

Part Nr.	P
E12.1074.00 Z	16
E12.1080.00 Z	16
E12.1080.27 E L	32
E12.1080.27 E R	32
E12.1085.00 Z	16
E12.1090.00 Z	16
E12.1094.00 Z	16
E12.1100.00 Z	16
E12.1100.27 E L	32
E12.1100.27 E R	32
E12.1102.25 F	23
E12.1103.25 F	23
E12.1104.25 F	23
E12.1105.00 Z	16
E12.1105.25 F	23
E12.1115.00 Z	16
E12.1125.27 E L	32
E12.1125.27 E R	32
E12.1150.37 E L	32
E12.1150.37 E R	32
E12.1175.37 E L	32
E12.1175.37 E R	32
E12.1200.53 E L	32
E12.1200.53 E R	32
E12.1210.00 P L	34
E12.1210.00 P R	34
E12.1210.11 P L	34
E12.1210.11 P R	34
E12.1250.53 E L	32
E12.1250.53 E R	32
E12.1300.63 E L	32
E12.1300.63 E R	32
E12.1302.00 V	31
E12.1302.05 V	31
E12.1303.00 V	31
E12.1304.00 V	31
E12.1305.00 V	31
E12.1306.00 V	31
E12.1306.25 F	23
E12.1520.11 P L	34
E12.1520.11 P R	34
E12.1607.33 F	23
E12.1608.33 F	23
E12.1609.33 F	23
E12.1810.33 F	23
E12.1812.33 F	23
E12.2015.02 A L	35
E12.2015.02 A R	35
E12.2115.43 F	23
E12.2516.33 F	24
E12.2616.43 F	24
E12.2617.43 F	24
E12.3020.02 A L	35
E12.3020.02 A R	35
E12.3030.02 A L	35
E12.3030.02 A R	35
E12.3050.17 E L	33
E12.3050.17 E R	33
E12.3060.27 E L	33
E12.3060.27 E R	33
E12.3080.27 EL	33
E12.3080.27 ER	33
E12.3100.37 E L	33
E12.3100.37 E R	33
E12.3118.53 F	24
E12.3125.53 E L	33

Part Nr.	P
E12.3125.53 E R	33
E12.3150.53 E L	33
E12.3150.53 E R	33
E12.4120.53 F	24
E12.4125.53 F	24
E12.5130.63 F	24
E30.0025.01 L	11
E30.0025.01 R	11
E30.0025.02 L	11
E30.0025.02 R	11
E30.0025.03 L	11
E30.0025.03 R	11
E30.0025.04 L	11
E30.0025.04 R	11
E30.0032.01 L	11
E30.0032.01 R	11
E30.0032.02 L	11
E30.0032.02 R	11
E30.0032.03 L	11
E30.0032.03 R	11
E30.0032.04 L	11
E30.0032.04 R	11
E30.0040.01 L	11
E30.0040.01 R	11
E30.0040.02 L	11
E30.0040.02 R	11
E30.0040.03 L	11
E30.0040.03 R	11
E30.0040.04 L	11
E30.0040.04 R	11
E60.1212.01 L	7
E60.1212.01 R	7
E60.1212.02 L	7
E60.1212.02 R	7
E60.1212.03 L	7
E60.1212.03 R	7
E60.1212.23 L	7
E60.1212.23 R	7
E60.1616.01 L	7
E60.1616.01 R	7
E60.1616.02 L	7
E60.1616.02 R	7
E60.1616.03 L	7
E60.1616.03 R	7
E60.1616.04 L	7
E60.1616.04 R	7
E60.1616.23 L	7
E60.1616.23 R	7
E60.2020.01 L	7
E60.2020.01 R	7
E60.2020.02 L	7
E60.2020.02 R	7
E60.2020.03 L	7
E60.2020.03 R	7
E60.2020.04 L	7
E60.2020.04 R	7
E60.2020.23 L	7
E60.2020.23 R	7
E60.2525.01 L	8
E60.2525.01 R	8
E60.2525.02 L	8
E60.2525.02 R	8
E60.2525.03 L	8
E60.2525.03 R	8
E60.2525.04 L	8
E60.2525.04 R	8

Part Nr.	P
E60.2525.23 L	8
E60.2525.23 R	8
E60.3232.01 L	8
E60.3232.01 R	8
E60.3232.02 L	8
E60.3232.02 R	8
E60.3232.03 L	8
E60.3232.03 R	8
E60.3232.04 L	8
E60.3232.04 R	8
E68.1212.08 L	13
E68.1212.08 R	13
E68.1212.11 L	13
E68.1212.11 R	13
E68.1616.11 L	13
E68.1616.11 R	13
E69.2020.01 L	10
E69.2020.01 R	10
E69.2020.02 L	10
E69.2020.02 R	10
E69.2020.03 L	10
E69.2020.03 R	10
E69.2020.04 L	10
E69.2020.04 R	10
E69.2525.01 L	10
E69.2525.01 R	10
E69.2525.02 L	10
E69.2525.02 R	10
E69.2525.03 L	10
E69.2525.03 R	10
E69.2525.04 L	10
E69.2525.04 R	10
E90.1212.01 L	9
E90.1212.01 R	9
E90.1616.01 L	9
E90.1616.01 R	9
E90.1616.02 L	9
E90.1616.02 R	9
E90.2020.01 L	9
E90.2020.01 R	9
E90.2020.02 L	9
E90.2020.02 R	9
E90.2020.03 L	9
E90.2020.03 R	9
E90.2020.04 L	9
E90.2020.04 R	9
E90.2525.01 L	9
E90.2525.01 R	9
E90.2525.02 L	9
E90.2525.02 R	9
E90.2525.03 L	9
E90.2525.03 R	9
E90.2525.04 L	9
E90.2525.04 R	9
E90.3232.01 L	9
E90.3232.01 R	9
E90.3232.02 L	9
E90.3232.02 R	9
E90.3232.03 L	9
E90.3232.03 R	9
E90.3232.04 L	9
E90.3232.04 R	9
TOA.E60.19.01 L	14
TOA.E60.19.01 R	14
TOA.E60.19.02 L	14
TOA.E60.19.02 R	14

Tools for highest expectations
SIMTEK

Index

simturn E12 Product list

Part Nr.	P
T0A.E60.19.03 R	14
T0A.E60.19.04 L	14
T0A.E60.19.04 R	14
T0A.E60.19.23 L	14
T0A.E60.19.23 R	14
T0A.E60.V1.01 L	8
T0A.E60.V1.01 R	8
T0A.E60.V1.02 L	8
T0A.E60.V1.02 R	8
T0A.E60.V1.03 L	8
T0A.E60.V1.03 R	8
T0A.E60.V1.23 L	8
T0A.E60.V1.23 R	8
T0G.K.E12.C1.01 R	15

Tools for highest expectations
SIMTEK

Information About The Cutting Parameters

Cutting speed recommendation as of page 41

General information about the cutting parameters recommendations

The given cutting parameters for speed and feed rates are ment as initial start values and are estimated for standard application conditions.
The best parameters depend on a wide variety of machine, workpiece and tool related conditions, for example the general machine condition, and can be above or below the given start values.

Example factors of influence and their effect on the cutting parameters

Reduce values	Increase values
Difficult machine and clamping conditions	Solid machine and clamping conditions
Difficult to machine materials	Easy to machine materials
Long tool reach (L2)	Small tool reach (L2)
No chip form geometry	With chip form geometry

List not complete

Suitability of cutting grades in relation to work piece hardness

Grade	Recommended up to approx.
X8*	HRC52
*T90 / *T91	HRC62
CBN	HRC65 (Depending on application)

Tools for highest expectations
SIMTEK

Cutting Speed Recommendation

ISO-Group	Recommended Cutting Grade	Work piece material	Sub-group	Alternative cutting grade	Vc m/min (Start)
P	X800 X802 X804 X808	Steel, unalloyed	≤ 0,15 % C	X400 / X600	210
			0,15 - 0,4 % C	X400 / X600	190
			≥ 0,4 % C	X400 / X600	180
		Steel, low alloyed (alloying elements ≤ 5%)	Non-hardened	X400 / X600	170
			Hardened	X400 / X600	100
		Steel, high alloyed (Alloying elements > 5%)	Annealed	X400 / X600	110
			Hardened	X400 / X600	90
		Castings	Unalloyed	X400 / X600	150
			Low alloyed (Alloying elements ≤ 5%)	X400 / X600	120
			High alloyed (Alloying elements > 5%)	X400 / X600	90
M	X400 / X600 X402 / X602 X404 / X604 X408 / X608	Stainless Steel Ferritic/Martensitic	Non-hardened	*T41	150
			PH-hardened	*T41	110
			Hardened	*T41	110
		Stainless Steel Austenitic	Austenitic	*T41	140
			PH-hardened	*T41	100
			Super Austenitic	*T41	110
		Stainless Steel Austenitic-ferritic (Duplex)	Non-weldable ≥ 0,05 % C	*T41	120
			Weldable < 0,05 % C	*T41	100
		Stainless Steel (Cast) Ferritic/martensitic	Non-hardened	*T41	130
			PH-hardened	*T41	90
			Hardened	*T41	100
		Stainless Steel (Cast) Austenitic	Austenitic	*T41	130
			PH-gehärtet	*T41	90
		Stainless Steel (Cast) Austenitic-ferritic (Duplex)	Non-weldable ≥ 0,05 % C	*T41	110
			Weldable < 0,05 % C	*T41	90

Tools for highest expectations
SIMTEK

Cutting Speed Recommendation

ISO-Group	Recommended Cutting Grade	Work piece material	Sub-group	Alternative cutting grade	Vc m/min (Start)
K	X800 X802 X804 X808	Malleable	Ferritic (short chipping)	*T57	180
			Pearlitic (long chipping)	*T57	150
		Grey Cast Iron	Low tensile strength	*T57	200
			High tensile strength	*T57	150
		Spheroidal Graphite cast iron	Ferritic	*T57	120
			Pearlitic	*T57	110
			Martensitic	*T57	110
N	X400 / X600 X402 / X602 X404 / X604 X408 / X608	Aluminium alloys, Whrought	Can not be hardened	*F25	590
			Can be hardened, hardened	*F25	530
		Aluminium alloys, Cast	Can not be hardened	*F25	590
			Can be hardened, hardened	*F25	530
		Aluminium alloys, Cast	< 5 % Si	*F25	240
			5 - 12 % Si	*X17	240
			> 12 % Si	PKD[1]	180
		Copper- and Copper Alloys	Free Cutting Alloys, ≥1 % Pb	*F25	290
			Brass, leaded bronzes, ≤ 1 % Pb	*F25	290
			Bronze, lead-free copper incl. electrolytic copper	*F25	210

Tools for highest expectations
SIMTEK

Cutting Speed Recommendation

ISO-Group	Recommended Cutting Grade	Work piece material	Sub-group	Alternative cutting grade	Vc m/min (Start)
S	X400 / X600 X402 / X602 X404 / X604 X408 / X608	Heat-resistant super alloys Fe-based	Annealed or solution treated	*X79	40
			Aged or solution treated and aged	*X79	30
		Heat-resistant super alloys Ni-based	Annealed or solution treated	*X79	40
			Aged or solution treated and aged	*X79	20
			Cast or Cast and aged	*X79	30
		Heat-resistant super alloys Co-based	Annealed or solution treated	*X79	10
			Solution treated and aged	*X79	10
			Cast or Cast and aged	*X79	10
		Titanium Alloys	Commercial pure (99,5 % Ti)	*X79	80
			α, near α and α + β alloys, annealed	*X79	40
			α+β Alloys in aged conditions as well as β alloys. Annealed or aged.	*X79	40
H	CBN[1]	Hardened steel		*T91	50
		Chilled cast iron, cast or cast and aged		*T91	90

1) For best results, a special cutting edge geometry is recommended here.
Please contact our tecnical support +1 862 757 8130 oder usa@simtek.com.

(2) Recommendation depends on the chosen cutting inserts. Please look at the cutting grade recommendations on the catalog page of the cutting insert.

Tools for highest expectations
SIMTEK

General Instructions For Use

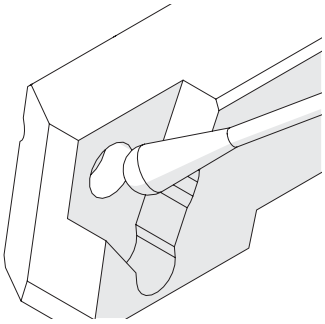

Please clean insert seat well before mounting and use.

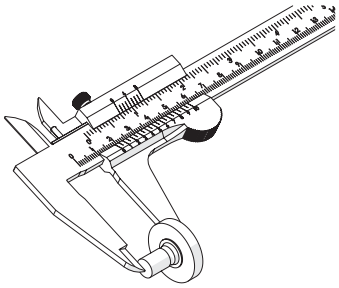

Please control your work pieces frequently.

We recommend the use of tool presetting and measuring devices.

Tools for highest expectations
SIMTEK